90°, 45°, 22 1/2° BEND

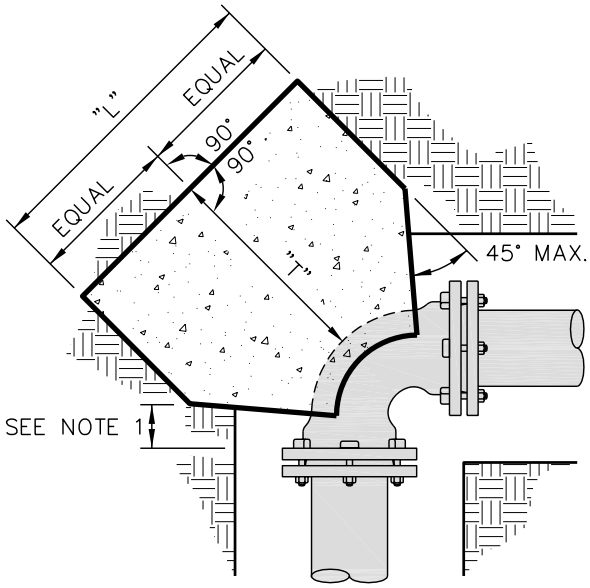

PLAN

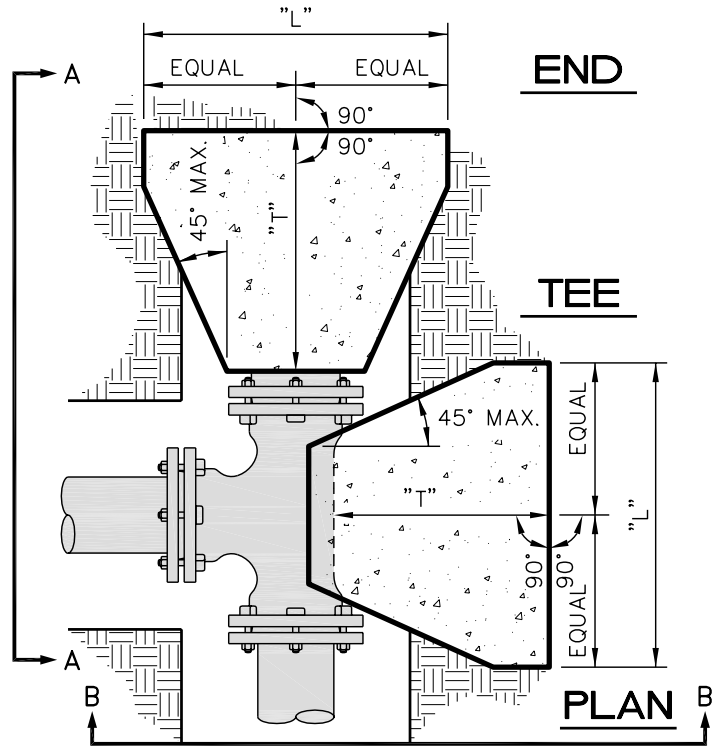

PLAN

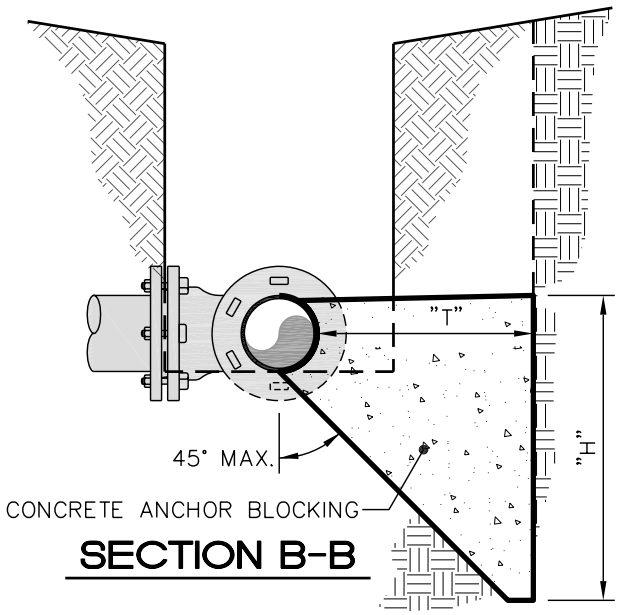

SECTION B-B

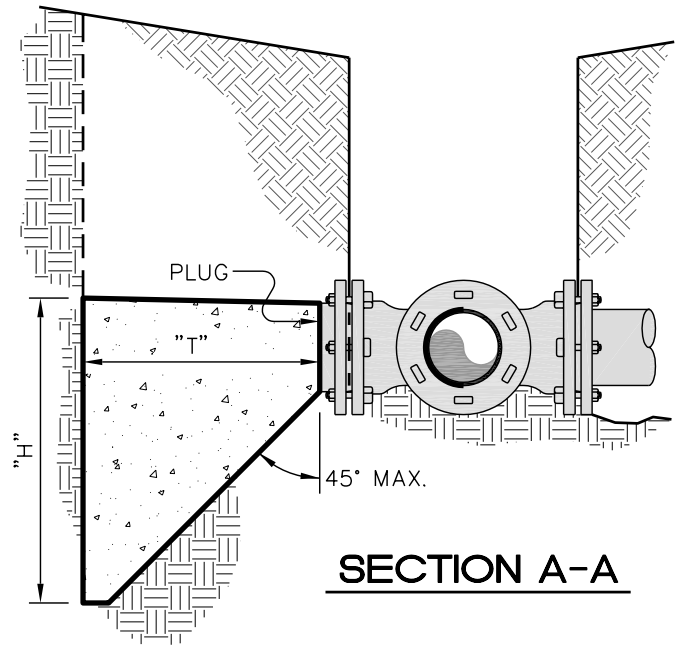

SECTION A-A

NOTES:

1. Concrete blocking is to be formed to ensure accessibility to fittings and poured against undisturbed earth.
2. Fittings are to be completely wrapped with plastic, prior to pouring concrete.
3. Concrete to be minimum 3,000 psi. @ 28 days.
4. All joints to be restrained.

Department of Utilities
10455 Armstrong Street
Fairfax, VA 22030-3630

CITY of FAIRFAX

USE WITH THE FAIRFAX STANDARD SPECIFICATIONS ONLY

Voice (703) 385-7920
FAX (703) 934-8427
www.fairfaxva.gov

BLOCKING DETAIL for HORIZONTAL BENDS AND TEE

SCALE:	DETAIL #
Not To Scale	2512.01
REVISION DATE:	SHEET #:
July, 2005	1 of 4

WORKING PRESSURE = 75 P.S.I.

PIPE SIZE	TYPE FITTING	DIMENSIONS (Ft.) "L"	"H"	"T" MIN.	VOLUME. CONCRETE CU. YD.
6 INCHES	END	2.50	1.00	2.50	0.19
	TEE	2.50	1.00	2.50	0.19
	90°	2.50	1.00	3.00	0.22
	45°	1.50	1.00	2.50	0.13
	22 1/2°	1.00	1.00	2.50	0.10
8 INCHES	END	2.00	2.00	2.50	0.29
	TEE	2.00	2.00	2.50	0.29
	90°	2.00	2.00	3.00	0.33
	45°	2.50	1.00	2.50	0.19
	22 1/2°	1.50	1.00	2.50	0.13
12 INCHES	END	3.00	3.00	2.50	0.61
	TEE	3.00	3.00	2.50	0.61
	90°	3.00	3.00	3.50	0.80
	45°	2.50	2.00	3.00	0.41
	22 1/2°	2.50	1.00	3.00	0.22
16 INCHES	END	5.00	3.50	2.67	1.22
	TEE	5.00	3.50	2.67	1.22
	90°	5.00	3.50	3.50	1.50
	45°	4.00	2.50	3.00	0.78
	22 1/2°	2.50	2.00	3.00	0.41
20 INCHES	END	5.50	4.50	3.00	1.87
	TEE	5.50	4.50	3.00	1.87
	90°	5.50	4.50	4.00	2.35
	45°	4.00	3.50	3.50	1.21
	22 1/2°	3.00	2.50	3.50	0.67
24 INCHES	END	6.50	5.50	3.00	2.69
	TEE	6.50	5.50	3.00	2.69
	90°	6.50	5.50	4.50	3.71
	45°	5.00	4.00	4.00	1.91
	22 1/2°	3.50	3.00	4.00	1.03

WORKING PRESSURE = 100 P.S.I.

PIPE SIZE	TYPE FITTING	DIMENSIONS (Ft.) "L"	"H"	"T" MIN.	VOLUME. CONCRETE CU. YD.
6 INCHES	END	2.50	1.50	2.50	0.19
	TEE	2.50	1.50	2.50	0.19
	90°	2.50	1.50	3.00	0.31
	45°	2.00	1.00	2.50	0.16
	22 1/2°	1.00	1.00	2.50	0.10
8 INCHES	END	2.50	2.50	2.50	0.43
	TEE	2.50	2.50	2.50	0.43
	90°	2.50	2.50	3.00	0.50
	45°	2.00	1.50	2.50	0.22
	22 1/2°	1.50	1.00	2.50	0.13
12 INCHES	END	4.00	3.00	2.50	0.81
	TEE	4.00	3.00	2.50	0.81
	90°	4.00	3.00	3.50	1.05
	45°	3.50	2.00	3.00	0.56
	22 1/2°	2.50	1.50	3.00	0.31
16 INCHES	END	5.50	4.00	2.67	1.53
	TEE	5.50	4.00	2.67	1.53
	90°	5.50	4.00	3.50	1.88
	45°	4.00	3.00	3.00	0.93
	22 1/2°	3.00	2.00	3.00	0.48
20 INCHES	END	6.50	5.50	3.00	2.69
	TEE	6.50	5.50	3.00	2.69
	90°	6.50	5.50	4.00	3.37
	45°	5.00	4.00	3.50	1.71
	22 1/2°	3.50	3.00	3.50	0.92
24 INCHES	END	8.00	6.00	3.00	3.59
	TEE	8.00	6.00	3.00	3.59
	90°	8.00	6.00	4.50	4.95
	45°	5.50	5.00	4.00	2.60
	22 1/2°	4.00	3.50	4.00	1.35

CHART NOTES:

1. If blocking excavation is in lightly compacted fill areas, or in areas where boulders or stumps have been removed, blocking size must be re-sized for the specific location/circumstance by a VA licensed Professional Engineer.
2. The above table is based on 2000 psf soil bearing pressure, $R=2pA \sin \frac{\theta}{2}$ and for a test pressure = 1.5 x working pressure.
3. This detail is not applicable to reducing bends.
4. Neither the weight of the concrete blocking nor friction between concrete blocking and soil was added into blocking sizes computation. Therefore, blocking size is conservative.
4. Anchor block design for pipe larger than 24" shall be reviewed on an individual basis by the City Engineer.

Department of Utilities
10455 Armstrong Street
Fairfax, VA 22030-3630

CITY of FAIRFAX

USE WITH THE FAIRFAX STANDARD SPECIFICATIONS ONLY

Voice (703) 385-7920
FAX (703) 934-8427
www.fairfaxva.gov

BLOCKING DETAIL for HORIZONTAL BENDS AND TEE

SCALE:	DETAIL #
Not To Scale	2512.01
REVISION DATE: July, 2005	SHEET #: 2 of 4

WORKING PRESSURE = 125 P.S.I.

PIPE SIZE	TYPE FITTING	DIMENSIONS (Ft.) "L"	"H"	"T" MIN.	VOLUME. CONCRETE CU. YD.
6 INCHES	END	2.00	2.00	2.50	0.29
	TEE	2.00	2.00	2.50	0.29
	90°	2.00	2.00	3.00	0.33
	45°	2.00	1.00	2.50	0.16
	22 1/2°	1.00	1.00	2.50	0.09
8 INCHES	END	3.00	2.50	2.50	0.51
	TEE	3.00	2.50	2.50	0.51
	90°	3.00	2.50	3.00	0.59
	45°	2.00	2.00	2.50	0.29
	22 1/2°	2.00	1.00	2.50	0.16
12 INCHES	END	5.00	3.00	2.50	1.00
	TEE	5.00	3.00	2.50	1.00
	90°	5.00	3.00	3.50	1.30
	45°	4.00	2.50	3.00	0.78
	22 1/2°	2.50	2.00	3.00	0.41
16 INCHES	END	6.00	4.50	2.67	1.87
	TEE	6.00	4.50	2.67	1.87
	90°	6.00	4.50	3.50	2.30
	45°	5.00	3.00	3.00	1.15
	22 1/2°	3.00	2.50	3.00	0.59
20 INCHES	END	7.50	5.50	3.00	3.09
	TEE	7.50	5.50	3.00	3.09
	90°	7.50	5.50	4.00	3.88
	45°	5.50	4.00	3.50	1.88
	22 1/2°	4.00	3.00	3.50	1.05
24 INCHES	END	9.50	6.50	3.00	4.61
	TEE	9.50	6.50	3.00	4.61
	90°	9.50	6.50	4.50	6.35
	45°	7.50	4.50	4.00	3.18
	22 1/2°	5.00	3.50	4.00	1.68

WORKING PRESSURE = 150 P.S.I.

PIPE SIZE	TYPE FITTING	DIMENSIONS (Ft.) "L"	"H"	"T" MIN.	VOLUME. CONCRETE CU. YD.
6 INCHES	END	2.50	2.00	2.50	0.35
	TEE	2.50	2.00	2.50	0.35
	90°	2.50	2.00	3.00	0.41
	45°	2.50	1.00	2.50	0.19
	22 1/2°	1.50	1.00	2.50	0.13
8 INCHES	END	4.00	2.00	2.50	0.55
	TEE	4.00	2.00	2.50	0.55
	90°	4.00	2.00	3.00	0.63
	45°	2.50	2.00	2.50	0.35
	22 1/2°	2.50	1.00	2.50	0.19
12 INCHES	END	5.00	4.00	2.50	1.32
	TEE	5.00	4.00	2.50	1.32
	90°	5.00	4.00	3.50	1.71
	45°	4.00	2.50	3.00	0.78
	22 1/2°	2.50	2.00	3.00	0.41
16 INCHES	END	7.50	4.50	2.67	2.32
	TEE	7.50	4.50	2.67	2.32
	90°	7.50	4.50	3.50	2.86
	45°	5.00	3.50	3.00	1.33
	22 1/2°	3.00	3.00	3.00	0.70
20 INCHES	END	8.50	6.00	3.00	3.81
	TEE	8.50	6.00	3.00	3.81
	90°	8.50	6.00	4.00	4.78
	45°	6.00	4.50	3.50	2.30
	22 1/2°	4.50	3.00	3.50	1.17
24 INCHES	END	11.00	6.50	3.00	5.33
	TEE	11.00	6.50	3.00	5.33
	90°	11.00	6.50	4.50	7.35
	45°	7.00	5.50	4.00	3.62
	22 1/2°	5.00	4.00	4.00	1.91

CHART NOTES:

1. If blocking excavation is in lightly compacted fill areas, or in areas where boulders or stumps have been removed, blocking size must be re-sized for the specific location/circumstance by a VA licensed Professional Engineer.
2. The above table is based on 2000 psf soil bearing pressure, $R=2pA \sin \frac{\theta}{2}$ and for a test pressure = 1.5 x working pressure.
3. This detail is not applicable to reducing bends.
4. Neither the weight of the concrete blocking nor friction between concrete blocking and soil was added into blocking sizes computation. Therefore, blocking size is conservative.
4. Anchor block design for pipe larger than 24" shall be reviewed on an individual basis by the City Engineer.

Department of Utilities
10455 Armstrong Street
Fairfax, VA 22030-3630

CITY of FAIRFAX

USE WITH THE FAIRFAX STANDARD SPECIFICATIONS ONLY

Voice (703) 385-7920
FAX (703) 934-8427
www.fairfaxva.gov

BLOCKING DETAIL for HORIZONTAL BENDS AND TEE

SCALE:	DETAIL #
Not To Scale	2512.01
REVISION DATE: July, 2005	SHEET #: 3 of 4

WORKING PRESSURE = 175 P.S.I.

PIPE SIZE	TYPE FITTING	DIMENSIONS (Ft.) "L"	"H"	"T" MIN.	VOLUME. CONCRETE CU. YD.
6 INCHES	END	3.00	2.00	2.50	0.42
	TEE	3.00	2.00	2.50	0.42
	90°	3.00	2.00	3.00	0.48
	45°	2.00	1.50	2.50	0.22
	22 1/2°	1.50	1.00	2.50	0.13
8 INCHES	END	4.00	2.50	2.50	0.68
	TEE	4.00	2.50	2.50	0.68
	90°	4.00	2.50	3.00	0.78
	45°	2.50	2.00	2.50	0.35
	22 1/2°	2.00	1.50	2.50	0.22
12 INCHES	END	5.50	4.00	2.50	1.45
	TEE	5.50	4.00	2.50	1.45
	90°	5.50	4.00	3.50	1.88
	45°	4.00	3.00	3.00	0.93
	22 1/2°	3.00	2.00	3.00	0.48
16 INCHES	END	7.50	6.00	2.67	3.09
	TEE	7.50	6.00	2.67	3.09
	90°	7.50	6.00	3.50	3.80
	45°	5.00	4.50	3.00	1.70
	22 1/2°	4.00	3.00	3.00	0.93
20 INCHES	END	9.50	6.00	3.00	4.26
	TEE	9.50	6.00	3.00	4.26
	90°	9.50	6.00	4.00	5.33
	45°	7.00	4.50	3.50	2.67
	22 1/2°	5.50	3.00	3.50	1.42
24 INCHES	END	13.00	6.50	3.00	6.30
	TEE	13.00	6.50	3.00	6.30
	90°	13.00	6.50	4.50	8.67
	45°	9.00	5.00	4.00	4.22
	22 1/2°	6.00	4.00	4.00	2.28

CHART NOTES:

1. If blocking excavation is in lightly compacted fill areas, or in areas where boulders or stumps have been removed, blocking size must be re-sized for the specific location/circumstance by a VA licensed Professional Engineer.
2. The above table is based on 2000 psf soil bearing pressure, $R=2pA \sin \frac{\theta}{2}$ and for a test pressure = 1.5 x working pressure.
3. This detail is not applicable to reducing bends.
4. Neither the weight of the concrete blocking nor friction between concrete blocking and soil was added into blocking sizes computation. Therefore, blocking size is conservative.
4. Anchor block design for pipe larger than 24" shall be reviewed on an individual basis by the City Engineer.

Department of Utilities
10455 Armstrong Street
Fairfax, VA 22030-3630

CITY of FAIRFAX
USE WITH THE FAIRFAX STANDARD SPECIFICATIONS ONLY

Voice (703) 385-7920
FAX (703) 934-8427
www.fairfaxva.gov

BLOCKING DETAIL for HORIZONTAL BENDS AND TEE

SCALE:	DETAIL #
Not To Scale	2512.01
REVISION DATE: July, 2005	SHEET #: 4 of 4