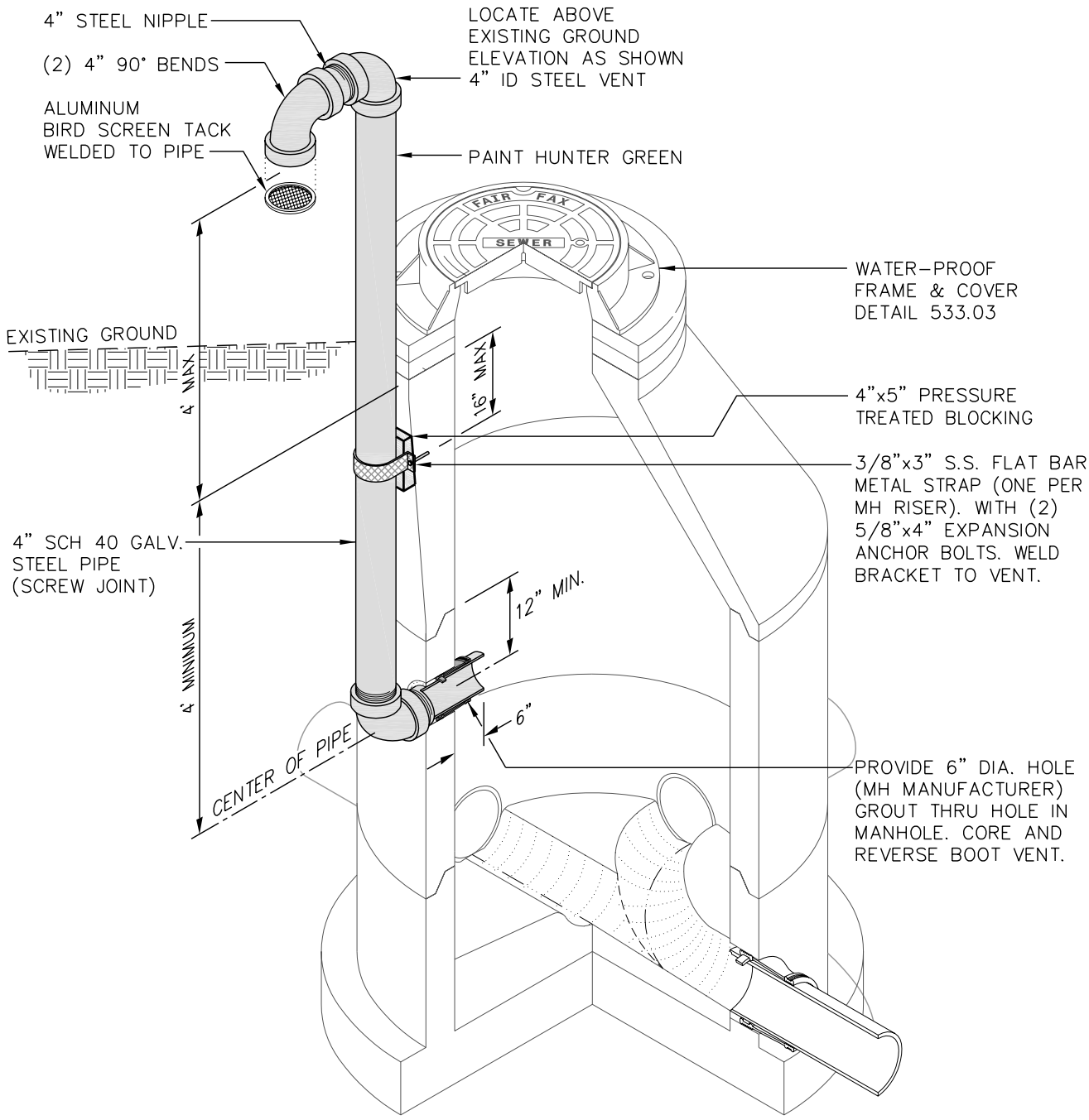

NOTES:

1. Locate vent pipe as shown or as directed by CITY.
2. Watertight frame and cover to utilize butyl rubber between frame and cover.
3. Core to be offset 12" min. from manhole riser seam.
4. Use ball float check valve when not extended above 100-year flood elevation.

Department of Utilities
10455 Armstrong Street
Fairfax, VA 22030-3630

CITY of FAIRFAX

USE WITH THE FAIRFAX STANDARD SPECIFICATIONS ONLY

Voice (703) 385-7920
FAX (703) 934-8427
www.fairfaxva.gov

STANDARD MANHOLE VENTING DETAIL

SCALE:	DETAIL #
Not To Scale	2536.01
REVISION DATE: July, 2005	SHEET #: 1 of 1