Rinker Design Associates, P.C.
Civil Engineering • Surveying • Land Planning
Transportation • Environmental
Right of Way Services
Office Locations
4115 Fairfax Corner Boulevard, Fairfax, VA 22030 Tel: (703) 385-7889 Fax: (703) 273-3387
4115 Cox Avenue Boulevard, Suite 100, Roanoke, VA 24012 Tel: (540) 563-0900 Fax: (540) 563-0901
4115 Brookstone Boulevard, Suite 100, Glen Allen, VA 23060 Tel: (804) 346-7000 Fax: (804) 346-8000
4115 Lee Highway, Suite 100, Staunton, VA 24401 Tel: (540) 213-0400 Fax: (540) 213-0401
4115 Pheasant Ridge Road, Suite 100, Blacksburg, VA 24060 Tel: (540) 552-0444 Fax: (540) 552-0445

PROJECT MANAGER Wendy Black Sanford, City of Fairfax (703) 385-7889
SURVEYED BY Rinker Design Assoc. P.C. (703) 368-7373 (2011)
DESIGNED BY Adam D. Weischenbach P.E. Rinker Design Assoc. P.C. (703) 368-7373
SUBSURFACE UTILITY PROVIDED BY Accumark (2011)

Drainage Summary

REVISED	STATE	STATE ROUTE	STATE PROJECT	SHEET NO.
	VA.	-	0029-151-105 P101, P102, R201, C501	2N

DESIGN FEATURES RELATING TO CONSTRUCTION OR TO REGULATION AND CONTROL OF TRAFFIC MAY BE SUBJECT TO CHANGE AS DEEMED NECESSARY BY THE DEPARTMENT

⊗ Denotes items to be paid for on a basis of plan quantities in accordance with current VDOT Road and Bridge Specifications.

◎ Denotes non-pay item. Item shall be incidental to other drainage items.

DRAINAGE SUMMARY

PROJECT NUMBER	DRAINAGE LOCATION	HEIGHT OF COVER	STORM SEWER PIPE: STORM SEWER PIPE 15"	STORM SEWER PIPE 24"	STORM SEWER PIPE 30"	STORM SEWER PIPE 36"	STORM SEWER PIPE 42"	STORM SEWER PIPE 48"	STORM SEWER PIPE 54"	STORM SEWER PIPE 72"	CONCRETE PIPE 18"	DROP INLETS: NS DROP INLET T-DI-1	DROP INLET DI-2B L=4'	DROP INLET DI-2B L=6'	NS DROP INLET T-DI-2B L=6'	NS DROP INLET T-DI-2B L=10'	NS DROP INLET T-DI-2E L=6'	DROP INLET DI-3A	DROP INLET DI-3B L=4'	DROP INLET DI-3B L=6'	DROP INLET DI-3B L=8'	DROP INLET DI-3B L=10'	NS DROP INLET T-DI-3B L=10'	DROP INLET DI-3B L=12'	DROP INLET DI-3BB L=6'	DROP INLET DI-3BB L=12'	DROP INLET DI-3BB L=14'	DROP INLET DI-3C L=6'	DROP INLET DI-4D L=4'	DROP INLET DI-4E L=6'	DROP INLET DI-4EE L=6'	DROP INLET DI-4F L=8'	DROP INLET DI-7	NS ADJUST EXISTING DROP INLET (OR MODIFY STRUCTURE)	NS ADJUST EXISTING MANHOLE (OR MODIFY STRUCTURE)	MANHOLES: MANHOLE MH-1 OR 2	FRAME & COVER MH-1	1/2" STEEL PLATE	MONOLITHIC BOX	B-2 DOGHOUSE BASE UNIT	B-1 BASE UNIT	◎ CONCRETE SAFETY SLAB SL-1	EROS.CONTR.STONE CL.I EC-1 TYPE B	⊗ MINOR STR.EXCAV.PIPE	⊗ MINOR STR.EXCAV. BOX CULVERT	⊗ BEDDING MAT'L.AGGR. NO.25 OR 26	NS NO.57 STONE
	NUMBER	FT	01156 LF.	01246 LF.	01306 LF.	01366 LF.	01426 LF.	01486 LF.	01546 LF.	01726 LF.	01182 LF.	08990 EA.	06747 EA.	06748 EA.	08990 EA.	08990 EA.	08990 EA.	06815 EA.	06817 EA.	06818 EA.	06819 EA.	06820 EA.	08990 EA.	06821 EA.	06827 EA.	06830 EA.	06831 EA.	06835 EA.	07304 EA.	07308 EA.	07324 EA.	07406 EA.	07508 EA.	24831 EA.	24832 EA.	09056 LF.	09057 EA.	EA.	EA.	EA.	EA.	EA.	TON	C.Y.	C.Y.	TON	TON
0029-151-105	4-1	-	-	-	-	-	-	-	-	-	-	-	-	-	-	-	-	-	-	-	-	-	-	-	-	-	-	-	-	-	-	-	-	1	-	-	-	-	-	-	-	-	-	-	-	-	-	-
	4-1 TO 4-2	3	9	-	-	-	-	-	-	-	-	-	-	-	-	-	-	-	-	-	-	-	-	-	-	-	-	-	-	-	-	-	-	-	-	-	-	-	-	-	-	-	-	-	-	-	-	-	-
	4-2	-	-	-	-	-	-	-	-	-	-	-	-	-	-	-	-	-	-	-	-	-	-	-	-	-	1	-	-	-	-	-	-	-	-	-	-	1	-	-	-	-	-	-	-	-	-	-
	4-2 TO 4-5	9	241	-	-	-	-	-	-	-	-	-	-	-	-	-	-	-	-	-	-	-	-	-	-	-	-	-	-	-	-	-	-	-	-	-	-	-	-	-	-	-	-	-	-	-	-	-	-
	4-3	-	-	-	-	-	-	-	-	-	-	-	-	-	-	-	-	-	-	-	-	-	-	-	-	-	-	-	-	-	-	-	-	1	-	-	-	-	-	1	-	-	-	-	-	-	-	-
	4-4	-	-	-	-	-	-	-	-	-	-	-	-	-	-	-	-	-	-	-	-	-	-	-	-	-	-	-	-	-	-	-	-	-	1	-	-	1	-	-	-	-	-	-	-	-	-	-
	4-5	-	-	-	-	-	-	-	-	-	-	-	-	-	-	1	-	-	-	-	-	-	-	-	-	-	-	-	-	-	-	-	-	-	1	-	-	-	-	-	-	-	-	-	-	-	-	-
	4-6	-	-	-	-	-	-	-	-	-	-	-	-	-	-	-	-	-	-	-	-	-	-	-	-	-	-	-	-	-	-	-	-	-	-	-	4.8	1	-	-	-	-	-	-	-	-	-	-
	4-6 TO 4-13	2	-	-	-	98	-	-	-	-	-	-	-	-	-	-	-	-	-	-	-	-	-	-	-	-	-	-	-	-	-	-	-	-	-	-	-	-	-	-	-	-	-	-	-	-	-	-
	4-7	-	-	-	-	-	-	-	-	-	-	-	-	-	-	-	-	-	-	-	1	-	-	-	-	-	-	-	-	-	-	-	-	-	-	-	-	-	-	1	-	-	-	-	-	-	-
	4-8	-	-	-	-	-	-	-	-	-	-	-	-	-	-	-	-	-	-	-	-	-	-	-	-	-	-	-	-	-	-	-	-	-	-	-	4.9	1	-	-	-	-	-	-	-	-	-	-
	4-9	-	-	-	-	-	-	-	-	-	-	-	-	-	-	-	-	-	-	1	-	-	-	-	-	-	-	-	-	-	-	-	-	-	-	-	-	-	-	-	-	-	-	-	-	-	-	-
	4-9 TO 4-16	3	28	-	-	-	-	-	-	-	-	-	-	-	-	-	-	-	-	-	-	-	-	-	-	-	-	-	-	-	-	-	-	-	-	-	-	-	-	-	-	-	-	-	-	-	-	-	-
	4-10	-	-	-	-	-	-	-	-	-	-	-	-	-	-	-	-	-	1	-	-	-	-	-	-	-	-	-	-	-	-	-	-	-	-	-	-	-	-	-	-	-	-	-	-	-	-	-
	4-10 TO 4-11	3	9	-	-	-	-	-	-	-	-	-	-	-	-	-	-	-	-	-	-	-	-	-	-	-	-	-	-	-	-	-	-	-	-	-	-	-	-	-	-	-	-	-	-	-	-	-	-
	4-11	-	-	-	-	-	-	-	-	-	-	-	-	-	-	-	-	-	-	-	-	-	-	-	-	-	-	-	-	-	-	-	-	-	-	-	3.5	1	-	-	1	-	-	-	-	-	-	-
	4-12	-	-	-	-	-	-	-	-	-	-	-	-	-	-	-	-	-	-	-	-	-	-	-	-	-	-	-	-	-	-	-	-	-	-	1	-	1	-	-	-	-	-	-	-	-	-	-
	4-13	-	-	-	-	-	-	-	-	-	-	-	-	-	-	-	-	-	-	-	-	-	-	-	-	-	-	-	-	-	-	-	-	-	-	-	4.9	1	-	-	-	-	-	-	-	-	-	-
	4-13 to 4-8	3	-	-	-	29	-	-	-	-	-	-	-	-	-	-	-	-	-	-	-	-	-	-	-	-	-	-	-	-	-	-	-	-	-	-	-	-	-	-	-	-	-	-	-	-	-	-
	4-15	-	-	-	-	-	-	-	-	-	-	-	-	-	-	-	1	-	-	-	-	-	-	-	-	-	-	-	-	-	-	-	-	-	-	-	-	-	-	1	-	-	-	-	-	-	-
	4-16	-	-	-	-	-	-	-	-	-	-	-	-	-	-	-	-	-	-	-	-	-	-	-	-	-	-	-	-	-	-	-	-	-	-	-	3.1	1	-	-	1	-	-	-	-	-	-	-
	4-16 TO 4-10	3	5	-	-	-	-	-	-	-	-	-	-	-	-	-	-	-	-	-	-	-	-	-	-	-	-	-	-	-	-	-	-	-	-	-	-	-	-	-	-	-	-	-	-	-	-	-	-
	BOX-2	-	-	-	-	-	-	-	-	-	-	-	-	-	-	-	-	-	-	-	-	-	-	-	-	-	-	-	-	-	-	-	-	-	-	-	-	-	-	-	-	-	-	269	-	23324	1167	1753
	5-1	-	-	-	-	-	-	-	-	-	-	-	-	-	-	-	1	-	-	-	-	-	-	-	-	-	-	-	-	-	-	-	-	-	-	-	-	-	-	1	-	-	-	-	-	-	-
	5-2	-	-	-	-	-	-	-	-	-	-	-	-	-	-	-	-	-	-	-	1	-	-	-	-	-	-	-	-	-	-	-	-	-	-	-	-	-	-	-	-	-	-	-	-	-	-	-
	5-2 TO 5-3	4	41	-	-	-	-	-	-	-	-	-	-	-	-	-	-	-	-	-	-	-	-	-	-	-	-	-	-	-	-	-	-	-	-	-	-	-	-	-	-	-	-	-	-	-	-	-	-
	5-3	-	-	-	-	-	-	-	-	-	-	-	-	-	-	-	-	-	-	-	-	-	-	-	-	-	-	-	-	-	-	-	-	-	-	-	3.8	1	-	-	1	-	-	-	-	-	-	-
	5-4	-	-	-	-	-	-	-	-	-	-	-	-	-	-	-	-	-	-	-	-	-	-	-	-	-	-	-	-	-	-	-	-	-	-	1	-	1	-	-	-	-	-	-	-	-	-	-
	5-5	-	-	-	-	-	-	-	-	-	-	-	-	-	-	-	-	-	-	-	-	-	-	-	-	-	-	-	-	-	-	-	-	-	-	1	-	1	-	-	-	-	-	-	-	-	-	-
	5-6	-	-	-	-	-	-	-	-	-	-	-	-	-	-	-	-	-	-	-	-	-	-	-	-	1	-	-	-	-	-	-	-	-	-	-	-	-	1	-	-	-	-	-	-	-	-	-
	5-6 TO BOX-2	11	6	-	-	-	-	-	-	-	-	-	-	-	-	-	-	-	-	-	-	-	-	-	-	-	-	-	-	-	-	-	-	-	-	-	-	-	-	-	-	-	-	-	-	-	-	-	-
	5-7	-	-	-	-	-	-	-	-	-	-	-	-	-	-	-	-	-	1	-	-	-	-	-	-	-	-	-	-	-	-	-	-	-	-	-	-	-	-	-	-	-	-	-	-	-	-	-
	5-7 TO 5-8	3	39	-	-	-	-	-	-	-	-	-	-	-	-	-	-	-	-	-	-	-	-	-	-	-	-	-	-	-	-	-	-	-	-	-	-	-	-	-	-	-	-	-	-	-	-	-	-
	5-8	-	-	-	-	-	-	-	-	-	-	-	-	-	-	-	-	-	-	-	-	-	-	-	-	-	1	-	-	-	-	-	-	-	-	-	-	-	-	-	-	-	-	-	-	-	-	-
	5-8 TO 5-9	3	60	-	-	-	-	-	-	-	-	-	-	-	-	-	-	-	-	-	-	-	-	-	-	-	-	-	-	-	-	-	-	-	-	-	-	-	-	-	-	-	-	-	-	-	-	-	-
	5-9	-	-	-	-	-	-	-	-	-	-	-	-	-	-	-	-	-	1	-	-	-	-	-	-	-	-	-	-	-	-	-	-	-	-	-	-	-	-	-	-	-	-	-	-	-	-	-
	5-9 TO 5-11	4	16	-	-	-	-	-	-	-	-	-	-	-	-	-	-	-	-	-	-	-	-	-	-	-	-	-	-	-	-	-	-	-	-	-	-	-	-	-	-	-	-	-	-	-	-	-	-
SUBTOTAL		-	454	-	-	127	-	-	-	-	-	-	-	-	-	1	2	-	3	1	2	-	-	-	-	1	1	1	-	-	-	-	2	2	3	25.0	10	2	-	7	-	-	269	-	23324	1167	1753

	PROJECT	SHEET NO.
	0029-151-105	2N

Rinker Design Associates, P.C.
Civil Engineering - Surveying - Land Planning
Transportation - Environmental
Right of Way Services
Office Locations
Main Office
4615 Cox Road
Glen Allen, VA 23060
Phone: (804) 527-1200
Fax: (804) 527-1202
Northern Office
4309 Chain Bridge Road
Suite 100
Fairfax, VA 22030
Phone: (703) 385-7889
Fax: (703) 385-7883
Southern Office
4309 Cox Road
Suite 100
Glen Allen, VA 23060
Phone: (804) 527-1200
Fax: (804) 527-1202
Western Office
4615 Cox Road
Glen Allen, VA 23060
Phone: (804) 527-1200
Fax: (804) 527-1202
www.RDAinc.com

PROJECT MANAGER Wendy Black Sanford, City of Fairfax (703) 385-7889
SURVEYED BY Rinker Design Assoc. P.C. (703) 368-7373 (2011)
DESIGNED BY Adam D. Weischenbach, P.E. Rinker Design Assoc. P.C. (703) 368-7373
SUBSURFACE UTILITY PROVIDED BY Accumark (2011)

Drainage Summary

REVISED	STATE	STATE ROUTE	STATE PROJECT	SHEET NO.
	VA.	-	0029-151-105 P101, P102, R201, C501	2N(A)

DESIGN FEATURES RELATING TO CONSTRUCTION OR TO REGULATION AND CONTROL OF TRAFFIC MAY BE SUBJECT TO CHANGE AS DEEMED NECESSARY BY THE DEPARTMENT

DRAINAGE SUMMARY

PROJECT NUMBER	DRAINAGE LOCATION	POST INSTALLATION INSPECTION (PIPE)	CONCRETE CLASS A4 BOX CULVERT	REINF. STEEL	CONCRETE CLASS A3 (JB-1)	REINF. STEEL (JB-1)	STRUCT. STEEL (JB-1)	POST INSTALLATION INSPECTION (CULVERT)	REMARKS
		00700	00522	00540	00525	00540	00560	00700	
	NUMBER	LF.	CY.	LB.	CY.	LB.	LB.	LF.	
0029-151-105	4-1	-	-	-	-	-	-	-	ST'D IS-1 REQ'D. GRATE A TYPE III REQ'D.
	4-1 TO 4-2	9	-	-	-	-	-	-	
	4-2	-	-	-	-	-	-	-	ST'D IS-1 REQ'D. CONNECT UD-4 TO DI, CONNECT OUTLET PIPE TO DI
	4-2 TO 4-5	241	-	-	-	-	-	-	
	4-3	-	-	-	-	-	-	-	ST'D IS-1 REQ'D. CONNECT TO EXISTING 15" CONC. PIPE, ST'D. B-2 DOGHOUSE BASE UNIT D=36", GRATE A TYPE III REQ'D.
	4-4	-	-	-	-	-	-	-	CONVERT EXISTING DI TO MANHOLE
	4-5	-	-	-	-	-	-	-	MODIFY TO ACCEPT 15" CONC. PIPE, CONNECT UD-4 TO DI
	4-6	-	-	-	-	-	-	-	ST'D IS-1 REQ'D. CONNECT TO EXISTING 27" PIPE, CONNECT TO EXISTING 30" PIPE
	4-6 TO 4-13	98	-	-	-	-	-	-	
	4-7	-	-	-	-	-	-	-	ST'D IS-1 REQ'D. CONNECT TO EXISTING 15" CONC. PIPE, ST'D. B-2 DOGHOUSE BASE UNIT D=36", CONNECT UD-4 TO DI
	4-8	-	-	-	-	-	-	-	ST'D IS-1 REQ'D. CONNECT TO EXISTING 15" CONC. PIPE, CONNECT TO EXISTING 36" CONC. PIPE
	4-9	-	-	-	-	-	-	-	ST'D IS-1 REQ'D.
	4-9 TO 4-16	28	-	-	-	-	-	-	
	4-10	-	-	-	-	-	-	-	ST'D IS-1 REQ'D.
	4-10 TO 4-11	9	-	-	-	-	-	-	
	4-11	-	-	-	-	-	-	-	ST'D IS-1 REQ'D. CONNECT TO EXISTING 15" CONC. PIPE, ST'D. B-2 DOGHOUSE BASE UNIT D=36"
	4-12	-	-	-	-	-	-	-	
	4-13	-	-	-	-	-	-	-	ST'D IS-1 REQ'D. CONNECT TO EXISTING 15" CONC. PIPE
	4-13 TO 4-8	29	-	-	-	-	-	-	
	4-15	-	-	-	-	-	-	-	ST'D IS-1 REQ'D. CONNECT TO EXISTING 36" CONC. PIPE, ST'D B-2 DOGHOUSE BASE UNIT D=60", CONNECT UD-4 TO DI
	4-16	-	-	-	-	-	-	-	ST'D IS-1 REQ'D. CONNECT TO EXISTING 15" CONC. PIPE, ST'D B-2 DOGHOUSE BASE UNIT D=36"
	4-16 TO 4-10	5	-	-	-	-	-	-	
	BOX-2	-	3746	635665	-	-	-	1977	ST'D BCD-DT, BCD-10, BCD-05, BCW-21, 1204 - 8'X8' DOUBLE BOX CULVERT, 677' - 6'X12' DOUBLE BOX CULVERT, 2 ST'D TYPE K WINGS, 1 ST'D TYPE H WING
	5-1	-	-	-	-	-	-	-	ST'D IS-1 REQ'D. CONNECT TO EXISTING 36" PIPE, ST'D B-2 DOGHOUSE BASE UNIT D=60", CONNECT UD-4 TO DI
	5-2	-	-	-	-	-	-	-	ST'D IS-1 REQ'D. CONNECT UD-4 TO DI, CONNECT OUTLET PIPE TO DI
	5-2 TO 5-3	41	-	-	-	-	-	-	
	5-3	-	-	-	-	-	-	-	ST'D IS-1 REQ'D. CONNECT TO EXISTING 15" PIPE, ST'D B-2 DOGHOUSE BASE UNIT D=36"
	5-4	-	-	-	-	-	-	-	
	5-5	-	-	-	-	-	-	-	
	5-6	-	-	-	-	-	-	-	ST'D IS-1 REQ'D. CONNECT UD-4 TO DI
	5-6 TO BOX-2	6	-	-	-	-	-	-	
	5-7	-	-	-	-	-	-	-	ST'D IS-1 REQ'D. CONNECT UD-4 TO DI
	5-7 TO 5-8	39	-	-	-	-	-	-	
	5-8	-	-	-	-	-	-	-	ST'D. IS-1 REQ'D. CONNECT UD-4 TO DI
	5-8 TO 5-9	60	-	-	-	-	-	-	
	5-9	-	-	-	-	-	-	-	ST'D IS-1 REQ'D. CONNECT UD-4 TO DI
	5-9 TO 5-11	16	-	-	-	-	-	-	
SUBTOTAL		581	3746	635665	-	-	-	1977	

PROJECT MANAGER Wendy Black Sanford, City of Fairfax (703) 385-7889
SURVEYED BY Rinker Design Assoc., P.C. (703) 368-7373 (2011)
DESIGNED BY Adam D. Weischenbach, P.E., Rinker Design Assoc., P.C. (703) 368-7373
SUBSURFACE UTILITY PROVIDED BY Accumark (2011)

Drainage Summary

REVISED	STATE	STATE ROUTE	STATE PROJECT	SHEET NO.
	VA.	-	0029-151-105 P101, P102, R201, C501	2N(1)

DESIGN FEATURES RELATING TO CONSTRUCTION OR TO REGULATION AND CONTROL OF TRAFFIC MAY BE SUBJECT TO CHANGE AS DEEMED NECESSARY BY THE DEPARTMENT

⊗ Denotes items to be paid for on a basis of plan quantities in accordance with current VDOT Road and Bridge Specifications.

◎ Denotes non-pay item. Item shall be incidental to other drainage items.

DRAINAGE SUMMARY

PROJECT NUMBER	DRAINAGE LOCATION	HEIGHT OF COVER	STORM SEWER PIPE: STORM SEWER PIPE 15"	STORM SEWER PIPE 24"	STORM SEWER PIPE 30"	STORM SEWER PIPE 36"	STORM SEWER PIPE 42"	STORM SEWER PIPE 48"	STORM SEWER PIPE 54"	STORM SEWER PIPE 72"	CONCRETE PIPE 18"	DROP INLETS: NS DROP INLET T-DI-1	DROP INLET DI-2B L=4'	DROP INLET DI-2B L=6'	NS DROP INLET T-DI-2B L=6'	NS DROP INLET T-DI-2B L=10'	NS DROP INLET T-DI-2E L=6'	DROP INLET DI-3A	DROP INLET DI-3B L=4'	DROP INLET DI-3B L=6'	DROP INLET DI-3B L=8'	DROP INLET DI-3B L=10'	NS DROP INLET T-DI-3B L=10'	DROP INLET DI-3B L=12'	DROP INLET DI-3BB L=6'	DROP INLET DI-3BB L=12'	DROP INLET DI-3BB L=14'	DROP INLET DI-3C L=6'	DROP INLET DI-4D L=4'	DROP INLET DI-4E L=6'	DROP INLET DI-4EE L=6'	DROP INLET DI-4F L=8'	DROP INLET DI-7	NS ADJUST EXISTING DROP INLET (OR MODIFY STRUCTURE)	NS ADJUST EXISTING MANHOLE (OR MODIFY STRUCTURE)	MANHOLES: MANHOLE MH-1 OR 2	MANHOLE MH-2	MANHOLE MH-2	FRAME & COVER MH-1	1/2" STEEL PLATE	MONOLITHIC BOX	B-2 DOGHOUSE BASE UNIT	B-1 BASE UNIT	◎ CONCRETE SAFETY SLAB SL-1	EROS.CONTR.STONE CL.I EC-1 TYPE B	⊗ MINOR STR.EXCAV.PIPE	⊗ MINOR STR.EXCAV. BOX CULVERT	⊗ BEDDING MAT'L.AGGR. NO.25 OR 26	NS NO.57 STONE
			01156	01246	01306	01366	01426	01486	01546	01726	01182	08990	06747	06748	08990	08990	08990	06815	06817	06818	06819	06820	08990	06821	06827	06830	06831	06835	07304	07308	07324	07406	07508	24831	24832	09056	09055	09057	-	-	-	-	-	9150	211	212	505	27552
	NUMBER	FT	LF.	LF.	LF.	LF.	LF.	LF.	LF.	LF.	LF.	EA.	EA.	EA.	EA.	EA.	EA.	EA.	EA.	EA.	EA.	EA.	EA.	EA.	EA.	EA.	EA.	EA.	EA.	EA.	EA.	EA.	EA.	EA.	EA.	LF.	LF.	EA.	EA.	EA.	EA.	EA.	EA.	TON	C.Y.	C.Y.	TON	TON
0029-151-105	5-10	-	-	-	-	-	-	-	-	-	-	-	-	-	-	-	-	-	1	-	-	-	-	-	-	-	-	-	-	-	-	-	-	-	-	-	-	-	-	-	-	-	-	-	-	-	-	-
	5-10 TO 5-37	4	43	-	-	-	-	-	-	-	-	-	-	-	-	-	-	-	-	-	-	-	-	-	-	-	-	-	-	-	-	-	-	-	-	-	-	-	-	-	-	-	-	-	-	-	-	-	-
	5-11	-	-	-	-	-	-	-	-	-	-	-	-	-	-	-	-	-	-	-	-	-	-	-	-	-	-	-	-	-	-	-	-	-	-	6.2	-	1	-	-	1	-	-	-	-	-	-	-
	5-12	-	-	-	-	-	-	-	-	-	-	-	-	-	-	-	-	-	-	1	-	-	-	-	-	-	-	-	-	-	-	-	-	-	-	-	-	-	-	-	-	-	-	-	-	-	-	-
	5-12 TO 5-13	3	-	-	20	-	-	-	-	-	-	-	-	-	-	-	-	-	-	-	-	-	-	-	-	-	-	-	-	-	-	-	-	-	-	-	-	-	-	-	-	-	-	-	-	-	-	-
	5-13	-	-	-	-	-	-	-	-	-	-	-	-	-	-	-	-	-	-	-	-	-	-	-	1	-	-	-	-	-	-	-	-	-	-	-	-	-	1	-	-	-	1	-	-	-	-	-
	5-13 TO BOX-2	13	-	-	6	-	-	-	-	-	-	-	-	-	-	-	-	-	-	-	-	-	-	-	-	-	-	-	-	-	-	-	-	-	-	-	-	-	-	-	-	-	-	-	-	-	-	-
	5-14	-	-	-	-	-	-	-	-	-	-	-	-	-	-	-	-	-	1	-	-	-	-	-	-	-	-	-	-	-	-	-	-	-	-	-	-	-	-	-	-	-	-	-	-	-	-	-
	5-14 TO 5-15	4	31	-	-	-	-	-	-	-	-	-	-	-	-	-	-	-	-	-	-	-	-	-	-	-	-	-	-	-	-	-	-	-	-	-	-	-	-	-	-	-	-	-	-	-	-	-	-
	5-15	-	-	-	-	-	-	-	-	-	-	-	-	-	-	-	-	-	-	-	-	-	-	-	-	-	-	-	-	-	-	-	-	-	1	-	-	1	-	-	-	-	-	-	-	-	-	-
	5-16	-	-	-	-	-	-	-	-	-	-	-	-	-	-	-	-	1	-	-	-	-	-	-	-	-	-	-	-	-	-	-	-	-	-	-	-	-	-	1	-	-	-	-	-	-	-	-	-
	5-17	-	-	-	-	-	-	-	-	-	-	-	-	-	-	-	-	-	-	-	-	-	-	-	-	-	-	-	-	-	-	-	-	-	1	-	-	1	-	-	-	-	-	-	-	-	-	-
	5-18	-	-	-	-	-	-	-	-	-	-	-	-	-	-	-	-	-	-	-	1	-	-	-	-	-	-	-	-	-	-	-	-	-	-	-	-	-	-	-	-	-	-	-	-	-	-	-
	5-18 TO 5-20	4	152	-	-	-	-	-	-	-	-	-	-	-	-	-	-	-	-	-	-	-	-	-	-	-	-	-	-	-	-	-	-	-	-	-	-	-	-	-	-	-	-	-	-	-	-	-	-
	5-20	-	-	-	-	-	-	-	-	-	-	-	-	-	-	-	-	-	-	-	-	-	-	-	-	-	-	-	-	-	-	-	-	-	-	-	-	-	1	-	-	1	-	-	-	-	-	-
	5-20 TO 5-21	2	-	-	-	-	-	-	11	-	-	-	-	-	-	-	-	-	-	-	-	-	-	-	-	-	-	-	-	-	-	-	-	-	-	-	-	-	-	-	-	-	-	-	22	-	2.0	3.0
	5-21		-	-	-	-	-	-	-	-	-	-	-	-	-	-	-	-	-	-	-	-	-	-	-	-	-	-	-	-	-	-	-	-	-	-	5.8	1	1	-	-	-	-	-	-	-	-	-
	5-21 TO 5-23	2	-	-	-	-	-	-	6	-	-	-	-	-	-	-	-	-	-	-	-	-	-	-	-	-	-	-	-	-	-	-	-	-	-	-	-	-	-	-	-	-	-	-	13	-	1.2	1.7
	5-22	-	-	-	-	-	-	-	-	-	-	-	-	-	-	-	-	-	-	1	-	-	-	-	-	-	-	-	-	-	-	-	-	-	-	-	-	-	-	-	-	-	-	-	-	-	-	-
	5-22 TO 5-23	6	6	-	-	-	-	-	-	-	-	-	-	-	-	-	-	-	-	-	-	-	-	-	-	-	-	-	-	-	-	-	-	-	-	-	-	-	-	-	-	-	-	-	-	-	-	-	-
	5-23	-	-	-	-	-	-	-	-	-	-	-	-	-	-	-	-	-	-	-	-	-	-	-	-	-	-	-	-	-	-	-	-	1	-	-	-	1	-	-	-	-	-	-	-	-	-	-
	5-24	-	-	-	-	-	-	-	-	-	-	-	-	-	-	-	-	-	-	-	-	-	-	1	-	-	-	-	-	-	-	-	-	-	-	-	-	-	-	-	-	-	-	-	-	-	-	-
	5-24 TO 5-26	4	23	-	-	-	-	-	-	-	-	-	-	-	-	-	-	-	-	-	-	-	-	-	-	-	-	-	-	-	-	-	-	-	-	-	-	-	-	-	-	-	-	-	-	-	-	-	-
	5-25	-	-	-	-	-	-	-	-	-	-	-	-	-	-	-	-	-	-	-	-	-	-	-	-	-	-	-	-	-	-	-	-	-	-	-	-	1	1	-	-	-	-	-	-	-	-	-
	5-26	-	-	-	-	-	-	-	-	-	-	-	-	-	1	-	-	-	-	-	-	-	-	-	-	-	-	-	-	-	-	-	-	-	-	-	-	-	1	-	-	-	-	-	-	-	-	-
	5-26 TO 5-25	7	-	-	-	-	-	-	-	17	-	-	-	-	-	-	-	-	-	-	-	-	-	-	-	-	-	-	-	-	-	-	-	-	-	-	-	-	-	-	-	-	-	-	85	-	4.3	6.5
	5-27	-	-	-	-	-	-	-	-	-	-	-	-	-	-	-	-	-	-	1	-	-	-	-	-	-	-	-	-	-	-	-	-	-	-	-	-	-	-	-	-	-	-	-	-	-	-	-
	5-27 TO 5-26	4	11	-	-	-	-	-	-	-	-	-	-	-	-	-	-	-	-	-	-	-	-	-	-	-	-	-	-	-	-	-	-	-	-	-	-	-	-	-	-	-	-	-	-	-	-	-	-
	5-28	-	-	-	-	-	-	-	-	-	-	-	-	-	1	-	-	-	-	-	-	-	-	-	-	-	-	-	-	-	-	-	-	1	-	-	-	-	-	-	-	-	-	-	-	-	-	-	-
	5-36	-	-	-	-	-	-	-	-	-	-	-	-	-	-	-	-	-	-	-	-	-	-	-	-	-	-	-	-	-	-	-	1	-	-	-	-	-	-	-	-	-	-	-	-	-	-	-
	5-36 TO BOX-2	10	6	-	-	-	-	-	-	-	-	-	-	-	-	-	-	-	-	-	-	-	-	-	-	-	-	-	-	-	-	-	-	-	-	-	-	-	-	-	-	-	-	-	-	-	-	-	-
	5-37	-	-	-	-	-	-	-	-	-	-	-	-	-	-	-	-	1	-	-	-	-	-	-	-	-	-	-	-	-	-	-	-	-	-	-	-	-	-	-	-	-	-	-	-	-	-	-
	5-37 TO 5-11	4	46	-	-	-	-	-	-	-	-	-	-	-	-	-	-	-	-	-	-	-	-	-	-	-	-	-	-	-	-	-	-	-	-	-	-	-	-	-	-	-	-	-	-	-	-	-	-
	5-38	-	-	-	-	-	-	-	-	-	-	-	-	-	-	-	-	-	-	-	-	-	-	-	-	-	-	-	-	-	-	-	-	1	-	-	-	1	-	-	-	-	-	-	-	-	-	-
	5C-1	-	-	-	-	-	-	-	-	-	-	-	-	-	-	-	-	-	-	-	-	-	-	-	-	-	-	-	-	-	-	-	-	1	-	-	-	1	-	-	-	-	-	-	-	-	-	-
	5C-2	-	-	-	-	-	-	-	-	-	-	-	-	-	-	-	-	-	-	-	1	-	-	-	-	-	-	-	-	-	-	-	-	-	-	-	-	-	-	-	1	-	-	-	-	-	-	-
	5C-3	-	-	-	-	-	-	-	-	-	-	-	-	-	-	-	-	-	-	-	-	-	-	-	-	-	-	-	-	-	-	-	-	1	-	-	-	1	-	-	-	-	-	-	-	-	-	-
SUBTOTAL		-	318	-	26	-	-	-	17	17	-	-	-	-	2	-	-	2	2	3	2	-	-	1	1	-	-	-	-	-	-	-	1	5	2	6.2	5.8	9	5	1	2	1	1	-	120	-	7.5	11.2

PROJECT	SHEET NO.
0029-151-105	2N(1)

Office Locations
Design Associates, P.C.
Civil Engineering · Surveying · Land Planning
Transportation · Environmental
Right of Way Services
Rinker
Gda
4/20/2016

PROJECT MANAGER Wendy Black Sanford, City of Fairfax (703) 385-7889
SURVEYED BY Rinker Design Assoc., P.C. (703) 368-7373 (2011)
DESIGNED BY Adam D. Weischenbach, P.E., Rinker Design Assoc., P.C. (703) 368-7373
SUBSURFACE UTILITY PROVIDED BY Accumark (2011)

Drainage Summary

REVISED	STATE	STATE ROUTE	STATE PROJECT	SHEET NO.
	VA.	-	0029-151-105 P101, P102, R201, C501	2N(1A)

DESIGN FEATURES RELATING TO CONSTRUCTION OR TO REGULATION AND CONTROL OF TRAFFIC MAY BE SUBJECT TO CHANGE AS DEEMED NECESSARY BY THE DEPARTMENT

DRAINAGE SUMMARY

PROJECT NUMBER	DRAINAGE LOCATION	POST INSTALLATION INSPECTION (PIPE)	CONCRETE CLASS A4 BOX CULVERT	REINF. STEEL	CONCRETE CLASS A3 (JB-1)	REINF. STEEL (JB-1)	STRUCT. STEEL (JB-1)	POST INSTALLATION INSPECTION (CULVERT)	DI-PRECAST TOP (VARIOUS TYPES) (ST'D T-DI-3, TYPE B NOSE, L=8')	REMARKS
		00700	00522	00540	00525	00540	00560	00700	14506	
	NUMBER	LF.	CY.	LB.	CY.	LB.	LB.	LF.	EA	
0029-151-105	5-10	-	-	-	-	-	-	-	-	ST'D IS-1 REQ'D. CONNECT UD-4 TO DI
	5-10 TO 5-37	43	-	-	-	-	-	-	-	
	5-11	-	-	-	-	-	-	-	-	ST'D IS-1 REQ'D. CONNECT TO EX. TRIPLE 5'X5' BOX CULVERT. CONNECT TO EX. 60" PIPE. ST'D. B-2 DOGHOUSE BASE UNIT D=84"
	5-12	-	-	-	-	-	-	-	-	ST'D. IS-1 REQ'D. CONNECT UD-4 TO DI
	5-12 TO 5-13	20	-	-	-	-	-	-	-	
	5-13	-	-	-	-	-	-	-	-	ST'D IS-1 REQ'D.
	5-13 TO BOX-2	6	-	-	-	-	-	-	-	
	5-14	-	-	-	-	-	-	-	-	ST'D. IS-1 REQ'D. CONNECT UD-4 TO DI
	5-14 TO 5-15	31	-	-	-	-	-	-	-	
	5-15	-	-	-	-	-	-	-	-	ST'D. IS-1 REQ'D. MODIFY TO ACCEPT 15" CONC. PIPE
	5-16	-	-	-	-	-	-	-	-	ST'D IS-1 REQ'D. CONNECT TO EXISTING 15" CONC. PIPE. CONNECT UD-4 TO DI
	5-17	-	-	-	-	-	-	-	-	
	5-18	-	-	-	-	-	-	-	-	ST'D. IS-1 REQ'D. CONNECT UD-4 TO DI
	5-18 TO 5-20	152	-	-	-	-	-	-	-	
	5-20	-	-	-	-	-	-	-	1	ST'D IS-1 REQ'D. CONNECT TO EXISTING 36" PIPE. ST'D B-1 BASE UNIT D=108". CONNECT UD-4 TO DI. CONNECT OUTLET PIPE TO DI
	5-20 TO 5-21	11	-	-	-	-	-	-	-	
	5-21	-	-	-	-	-	-	-	-	ST'D. IS-1 REQ'D.
	5-21 TO 5-23	6	-	-	-	-	-	-	-	
	5-22	-	-	-	-	-	-	-	-	ST'D. IS-1 REQ'D. CONNECT UD-4 TO DI
	5-22 TO 5-23	6	-	-	-	-	-	-	-	
	5-23	-	-	-	-	-	-	-	-	ST'D. IS-1 REQ'D. MODIFY TO ACCEPT 15" CONC. PIPE. MODIFY TO ACCEPT 54" CONC. PIPE. CONVERT EXISTING DI TO MANHOLE
	5-24	-	-	-	-	-	-	-	-	ST'D. IS-1 REQ'D. CONNECT UD-4 TO DI
	5-24 TO 5-26	23	-	-	-	-	-	-	-	
	5-25	-	-	-	43.4	10484	40	-	-	TYPE B TOWER REQ'D.
	5-26	-	-	-	30.2	8690	-	-	-	CONNECT TO EXISTING 60" CONC. PIPE CONNECT UD-4 TO DI
	5-26 TO 5-25	17	-	-	-	-	-	-	-	
	5-27	-	-	-	-	-	-	-	-	ST'D. IS-1 REQ'D. CONNECT UD-4 TO DI
	5-27 TO 5-26	11	-	-	-	-	-	-	-	
	5-28	-	-	-	-	-	-	-	-	
	5-36	-	-	-	-	-	-	-	-	ST'D. IS-1 REQ'D. GRATE A TYPE III REQ'D.
	5-36 TO BOX-2	6	-	-	-	-	-	-	-	
	5-37	-	-	-	-	-	-	-	-	ST'D. IS-1 REQ'D. CONNECT UD-4 TO DI
	5-37 TO 5-11	46	-	-	-	-	-	-	-	
	5-38	-	-	-	-	-	-	-	-	CONVERT EXISTING DI TO MANHOLE
	5C-1	-	-	-	-	-	-	-	-	CONVERT EXISTING DI TO MANHOLE
	5C-2	-	-	-	-	-	-	-	-	ST'D IS-1 REQ'D. CONNECT TO EXISTING 15" CONC. PIPE. ST'D B-2 DOGHOUSE BASE UNIT D=36". CONNECT UD-4 TO DI
	5C-3	-	-	-	-	-	-	-	-	CONVERT EXISTING DI TO MANHOLE
SUBTOTAL		378	-	-	73.6	19174	40	-	1	

PROJECT	SHEET NO.
0029-151-105	2N(1A)

Rinker Design Associates, P.C.
Civil Engineering - Surveying - Land Planning
Transportation - Environmental
Right of Way Services
Office Locations
4121 Cox Road, Suite 200, Glen Allen, VA 23060, Tel: (804) 270-2759, Fax: (804) 270-5860
4121 Carrington Boulevard, Suite 200, Glen Allen, VA 23060, Tel: (804) 270-2759, Fax: (804) 270-5860
9000 Discovery Boulevard, Suite 200, Newport News, VA 23608, Tel: (757) 874-1691, Fax: (757) 874-1692
4121 Wilson Boulevard, Suite 200, Arlington, VA 22203, Tel: (703) 243-3700, Fax: (703) 243-3800

PROJECT MANAGER Wendy Black Sanford, City of Fairfax (703) 385-7889
SURVEYED BY Rinker Design Assoc., P.C. (703) 368-7373 (2011)
DESIGNED BY Adam D. Weischenbach, P.E., Rinker Design Assoc., P.C. (703) 368-7373
SUBSURFACE UTILITY PROVIDED BY Accumark (2011)

Drainage Summary

REVISED	STATE	STATE ROUTE	STATE PROJECT	SHEET NO.
	VA.	-	0029-151-105 P101, P102, R201, C501	2N(2)

DESIGN FEATURES RELATING TO CONSTRUCTION OR TO REGULATION AND CONTROL OF TRAFFIC MAY BE SUBJECT TO CHANGE AS DEEMED NECESSARY BY THE DEPARTMENT

⊗ Denotes items to be paid for on a basis of plan quantities in accordance with current VDOT Road and Bridge Specifications.

◎ Denotes non-pay item. Item shall be incidental to other drainage items.

DRAINAGE SUMMARY

PROJECT NUMBER	DRAINAGE LOCATION	HEIGHT OF COVER	STORM SEWER PIPE: STORM SEWER PIPE 15"	STORM SEWER PIPE 24"	STORM SEWER PIPE 30"	STORM SEWER PIPE 36"	STORM SEWER PIPE 42"	STORM SEWER PIPE 48"	STORM SEWER PIPE 54"	STORM SEWER PIPE 72"	CONCRETE PIPE 18"	DROP INLETS: NS DROP INLET DI-1	DROP INLET DI-2B L=4'	DROP INLET DI-2B L=6'	NS DROP INLET DI-2B L=6'	NS DROP INLET DI-2B L=10'	NS DROP INLET DI-2E L=6'	DROP INLET DI-3A	DROP INLET DI-3B L=4'	DROP INLET DI-3B L=6'	DROP INLET DI-3B L=8'	DROP INLET DI-3B L=10'	NS DROP INLET DI-3B L=10'	DROP INLET DI-3B L=12'	DROP INLET DI-3BB L=6'	DROP INLET DI-3BB L=12'	DROP INLET DI-3BB L=14'	DROP INLET DI-3C L=6'	DROP INLET DI-4D L=4'	DROP INLET DI-4E L=6'	DROP INLET DI-4EE L=6'	DROP INLET DI-4F L=8'	DROP INLET DI-7	NS ADJUST EXISTING DROP INLET (OR MODIFY STRUCTURE)	NS ADJUST EXISTING MANHOLE (OR MODIFY STRUCTURE)	MANHOLES: MANHOLE MH-1 OR 2	FRAME & COVER MH-1	1/2" STEEL PLATE	MONOLITHIC BOX	B-2 DOGHOUSE BASE UNIT	B-1 BASE UNIT	◎ CONCRETE SAFETY SLAB SL-1	EROS.CONTR.STONE CL.I EC-1 TYPE B	⊗ MINOR STR.EXCAV.PIPE	⊗ MINOR STR.EXCAV. BOX CULVERT	⊗ BEDDING MAT'L.AGGR. NO.25 OR 26	NS NO.57 STONE
	NUMBER	FT	01156 LF.	01246 LF.	01306 LF.	01366 LF.	01426 LF.	01486 LF.	01546 LF.	01726 LF.	01182 LF.	08990 EA.	06747 EA.	06748 EA.	08990 EA.	08990 EA.	08990 EA.	06815 EA.	06817 EA.	06818 EA.	06819 EA.	06820 EA.	08990 EA.	06821 EA.	06827 EA.	06830 EA.	06831 EA.	06835 EA.	07304 EA.	07308 EA.	07324 EA.	07406 EA.	07508 EA.	24831 EA.	24832 EA.	09056 LF.	09057 EA.	EA.	EA.	EA.	EA.	EA.	TON	C.Y.	C.Y.	TON	TON
0029-151-105	5C-4	-	-	-	-	-	-	-	-	-	-	-	-	-	-	-	-	-	-	-	-	-	-	-	-	-	-	-	-	-	-	-	-	-	-	1	-	1	-	-	-	-	-	-	-	-	-
	5C-5	-	-	-	-	-	-	-	-	-	-	-	-	-	-	-	-	-	-	-	-	-	1	-	-	-	-	-	-	-	-	-	-	-	1	-	-	-	-	-	-	-	-	-	-	-	-
	5E-1	-	-	-	-	-	-	-	-	-	-	-	-	-	-	-	-	-	-	-	-	-	-	-	-	-	-	-	-	-	-	-	-	-	-	-	4.9	1	-	-	-	-	-	-	-	-	-
	5E-1 TO 5E-2	3	-	-	82	-	-	-	-	-	-	-	-	-	-	-	-	-	-	-	-	-	-	-	-	-	-	-	-	-	-	-	-	-	-	-	-	-	-	-	-	-	-	-	-	-	-
	5E-2	-	-	-	-	-	-	-	-	-	-	-	-	-	-	-	-	-	-	-	-	1	-	-	-	-	-	-	-	-	-	-	-	-	-	-	-	-	-	-	-	-	-	-	-	-	-
	5E-2 TO 5-12	5	-	-	178	-	-	-	-	-	-	-	-	-	-	-	-	-	-	-	-	-	-	-	-	-	-	-	-	-	-	-	-	-	-	-	-	-	-	-	-	-	-	-	-	-	-
	5E-3	-	-	-	-	-	-	-	-	-	-	-	-	-	-	-	-	-	-	1	-	-	-	-	-	-	-	-	-	-	-	-	-	-	-	-	-	-	-	-	1	-	-	-	-	-	-
	5E-4	-	-	-	-	-	-	-	-	-	-	-	-	-	-	-	-	-	-	-	1	-	-	-	-	-	-	-	-	-	-	-	-	-	-	-	-	-	-	-	-	-	-	-	-	-	-
	5E-4 TO 5-6	4	159	-	-	-	-	-	-	-	-	-	-	-	-	-	-	-	-	-	-	-	-	-	-	-	-	-	-	-	-	-	-	-	-	-	-	-	-	-	-	-	-	-	-	-	-
	5E-6	-	-	-	-	-	-	-	-	-	-	-	-	-	-	-	-	-	1	-	-	-	-	-	-	-	-	-	-	-	-	-	-	-	-	-	-	-	-	-	-	-	-	-	-	-	-
	5E-6 TO 5E-4	4	29	-	-	-	-	-	-	-	-	-	-	-	-	-	-	-	-	-	-	-	-	-	-	-	-	-	-	-	-	-	-	-	-	-	-	-	-	-	-	-	-	-	-	-	-
	5G-1	-	-	-	-	-	-	-	-	-	-	-	-	-	-	-	-	-	-	1	-	-	-	-	-	-	-	-	-	-	-	-	-	-	-	-	-	-	-	-	-	-	-	-	-	-	-
	6-1	-	-	-	-	-	-	-	-	-	-	-	-	-	-	-	-	-	1	-	-	-	-	-	-	-	-	-	-	-	-	-	-	-	-	-	-	-	-	-	-	-	-	-	-	-	-
	6-1 TO 6-13	2	-	90	-	-	-	-	-	-	-	-	-	-	-	-	-	-	-	-	-	-	-	-	-	-	-	-	-	-	-	-	-	-	-	-	-	-	-	-	-	-	-	-	-	-	-
	6-2	-	-	-	-	-	-	-	-	-	-	-	-	-	-	-	-	-	-	1	-	-	-	-	-	-	-	-	-	-	-	-	-	-	-	-	-	-	-	-	-	-	-	-	-	-	-
	6-2 TO 6-13	3	8	-	-	-	-	-	-	-	-	-	-	-	-	-	-	-	-	-	-	-	-	-	-	-	-	-	-	-	-	-	-	-	-	-	-	-	-	-	-	-	-	-	-	-	-
	6-3	-	-	-	-	-	-	-	-	-	-	-	-	1	-	-	-	-	-	-	-	-	-	-	-	-	-	-	-	-	-	-	-	-	-	-	-	-	-	-	-	-	-	-	-	-	-
	6-3 TO 6-4	3	8	-	-	-	-	-	-	-	-	-	-	-	-	-	-	-	-	-	-	-	-	-	-	-	-	-	-	-	-	-	-	-	-	-	-	-	-	-	-	-	-	-	-	-	-
	EX19 TO 6-4	2	-	-	-	-	-	-	-	-	4	-	-	-	-	-	-	-	-	-	-	-	-	-	-	-	-	-	-	-	-	-	-	-	-	-	-	-	-	-	-	-	-	-	-	-	-
	6-4	-	-	-	-	-	-	-	-	-	-	-	-	-	-	-	-	-	1	-	-	-	-	-	-	-	-	-	-	-	-	-	-	-	-	-	-	-	-	-	-	-	-	-	-	-	-
	6-4 TO 6-6	4	-	-	169	-	-	-	-	-	-	-	-	-	-	-	-	-	-	-	-	-	-	-	-	-	-	-	-	-	-	-	-	-	-	-	-	-	-	-	-	-	-	-	-	-	-
	6-5	-	-	-	-	-	-	-	-	-	-	-	-	-	-	-	-	-	-	-	-	1	-	-	-	-	-	-	-	-	-	-	-	-	-	-	-	-	-	-	-	-	-	-	-	-	-
	6-5 TO 6-6	3	9	-	-	-	-	-	-	-	-	-	-	-	-	-	-	-	-	-	-	-	-	-	-	-	-	-	-	-	-	-	-	-	-	-	-	-	-	-	-	-	-	-	-	-	-
	6-6	-	-	-	-	-	-	-	-	-	-	-	-	-	-	-	-	-	1	-	-	-	-	-	-	-	-	-	-	-	-	-	-	-	-	-	-	-	-	-	-	-	-	-	-	-	-
	6-6 TO 6-12	5	-	-	90	-	-	-	-	-	-	-	-	-	-	-	-	-	-	-	-	-	-	-	-	-	-	-	-	-	-	-	-	-	-	-	-	-	-	-	-	-	-	-	-	-	-
	6-7	-	-	-	-	-	-	-	-	-	-	-	-	-	-	-	-	-	1	-	-	-	-	-	-	-	-	-	-	-	-	-	-	-	-	-	-	-	-	-	-	-	-	-	-	-	-
	6-7 TO 6-8	3	7	-	-	-	-	-	-	-	-	-	-	-	-	-	-	-	-	-	-	-	-	-	-	-	-	-	-	-	-	-	-	-	-	-	-	-	-	-	-	-	-	-	-	-	-
	6-8	-	-	-	-	-	-	-	-	-	-	-	-	-	-	-	-	-	-	-	-	-	-	-	-	-	-	-	1	-	-	-	-	-	-	-	-	-	-	-	-	-	-	-	-	-	-
	6-8 TO 7-2	5	-	-	-	258	-	-	-	-	-	-	-	-	-	-	-	-	-	-	-	-	-	-	-	-	-	-	-	-	-	-	-	-	-	-	-	-	-	-	-	-	-	-	-	-	-
	6-9	-	-	-	-	-	-	-	-	-	-	-	-	-	-	-	-	-	-	-	-	-	-	-	-	-	-	-	-	-	-	-	1	-	-	-	-	-	-	-	-	-	-	-	-	-	-
	6-9 TO 6-10	4	45	-	-	-	-	-	-	-	-	-	-	-	-	-	-	-	-	-	-	-	-	-	-	-	-	-	-	-	-	-	-	-	-	-	-	-	-	-	-	-	-	-	-	-	-
	EX43 TO 6-10	4	-	-	52	-	-	-	-	-	-	-	-	-	-	-	-	-	-	-	-	-	-	-	-	-	-	-	-	-	-	-	-	-	-	-	-	-	-	-	-	-	-	-	-	-	-
	6-10	-	-	-	-	-	-	-	-	-	-	-	-	-	-	-	-	-	-	-	-	-	-	-	-	-	-	-	-	-	-	-	-	-	-	-	8.1	1	-	-	-	-	-	-	-	-	-
	6-10 TO BOX-2	6	-	-	18	-	-	-	-	-	-	-	-	-	-	-	-	-	-	-	-	-	-	-	-	-	-	-	-	-	-	-	-	-	-	-	-	-	-	-	-	-	-	-	-	-	-
	6-11	-	-	-	-	-	-	-	-	-	-	1	-	-	-	-	-	-	-	-	-	-	-	-	-	-	-	-	-	-	-	-	-	-	-	-	-	-	-	-	-	1	-	-	-	-	-
	6-11 TO BOX-2	7	-	-	20	-	-	-	-	-	-	-	-	-	-	-	-	-	-	-	-	-	-	-	-	-	-	-	-	-	-	-	-	-	-	-	-	-	-	-	-	-	-	-	-	-	-
	6-12	-	-	-	-	-	-	-	-	-	-	-	-	-	-	-	-	-	1	-	-	-	-	-	-	-	-	-	-	-	-	-	-	-	-	-	-	-	-	-	-	-	-	-	-	-	-
SUBTOTAL		-	265	90	609	258	-	-	-	-	4	1	-	1	-	-	-	-	6	3	1	2	1	-	-	-	-	-	1	-	-	-	1	1	1	13.0	3	-	-	1	1	-	-	-	-	-	-

PROJECT	SHEET NO.
0029-151-105	2N(2)

Rinker Design Associates, P.C.
Civil Engineering • Surveying • Land Planning
Transportation • Environmental
Right of Way Services
Office Locations
4/20/2016

Office Locations
Rinker Design Associates, P.C.
Civil Engineering - Surveying - Land Planning
Transportation - Environmental
Right of Way Services
Main Office
10437 Innovation Drive
Suite 400
Manassas, VA 20110
Phone: (703) 257-5960
Fax: (703) 257-5961
Office Also In
Fredericksburg, Gloucester, Richmond
Office Also In
Charlottesville, Lynchburg, Roanoke
Office Also In
Harrisonburg, Staunton, Winchester
Office Also In
Bristol, Danville, Martinsville

PROJECT MANAGER Wendy Black Sanford, City of Fairfax (703) 385-7889
SURVEYED BY Rinker Design Assoc., P.C. (703) 368-7373 (2011)
DESIGNED BY Adam D. Weischenbach, P.E., Rinker Design Assoc., P.C. (703) 368-7373
SUBSURFACE UTILITY PROVIDED BY Accumark (2011)

Drainage Summary

REVISED	STATE	STATE ROUTE	STATE PROJECT	SHEET NO.
	VA.	-	0029-151-105 P101, P102, R201, C501	2N(2A)

DESIGN FEATURES RELATING TO CONSTRUCTION OR TO REGULATION AND CONTROL OF TRAFFIC MAY BE SUBJECT TO CHANGE AS DEEMED NECESSARY BY THE DEPARTMENT

DRAINAGE SUMMARY

PROJECT NUMBER	DRAINAGE LOCATION	POST INSTALLATION INSPECTION (PIPE)	CONCRETE CLASS A4 BOX CULVERT	REINF. STEEL	CONCRETE CLASS A3 (JB-1)	REINF. STEEL (JB-1)	STRUCT. STEEL (JB-1)	POST INSTALLATION INSPECTION (CULVERT)	REMARKS
		00700	00522	00540	00525	00540	00560	00700	
	NUMBER	LF.	CY.	LB.	CY.	LB.	LB.	LF.	
0029-151-105	5C-4	-	-	-	-	-	-	-	
	5C-5	-	-	-	-	-	-	-	CONNECT UD-4 TO DI
	5E-1	-	-	-	-	-	-	-	ST'D. IS-1 REQ'D., CONNECT TO EXISITNG 18" CONC. PIPE, CONNECT TO EXISTING 24" PIPE
	5E-1 TO 5E-2	82	-	-	-	-	-	-	
	5E-2	-	-	-	-	-	-	-	ST'D. IS-1 REQ'D., CONNECT UD-4 TO DI
	5E-2 TO 5-12	178	-	-	-	-	-	-	
	5E-3	-	-	-	-	-	-	-	CONNECT TO EXISTING 18" CONC. PIPE, ST'D B-2 DOGHOUSE BASE UNIT D=36", CONNECT UD-4 TO DI
	5E-4	-	-	-	-	-	-	-	ST'D IS-1 REQ'D., CONNECT UD-4 TO DI, CONNECT OUTLET PIPE TO DI
	5E-4 TO 5-6	159	-	-	-	-	-	-	
	5E-6	-	-	-	-	-	-	-	ST'D. IS-1 REQ'D., CONNECT UD-4 TO DI
	5E-6 TO 5E-4	29	-	-	-	-	-	-	
	5G-1	-	-	-	-	-	-	-	ST'D IS-1 REQ'D., CONNECT TO EXISTING 15" CONC. PIPE, CONNECT UD-4 TO DI
	6-1	-	-	-	-	-	-	-	ST'D IS-1 REQ'D., CONNECT UD-4 TO DI, CONNECT TO EXISTNG 18" CONC. PIPE
	6-1 TO 6-13	90	-	-	-	-	-	-	
	6-2	-	-	-	-	-	-	-	ST'D. IS-1 REQ'D., CONNECT UD-4 TO DI
	6-2 TO 6-13	8	-	-	-	-	-	-	
	6-3	-	-	-	-	-	-	-	ST'D. IS-1 REQ'D., CONNECT UD-4 TO DI
	6-3 TO 6-4	8	-	-	-	-	-	-	
	EX19 TO 6-4	4	-	-	-	-	-	-	EXISTING PIPE TO BE EXTENDED WITH CONCRETE PIPE
	6-4	-	-	-	-	-	-	-	ST'D. IS-1 REQ'D., CONNECT UD-4 TO DI
	6-4 TO 6-6	169	-	-	-	-	-	-	
	6-5	-	-	-	-	-	-	-	ST'D. IS-1 REQ'D., CONNECT UD-4 TO DI
	6-5 TO 6-6	9	-	-	-	-	-	-	
	6-6	-	-	-	-	-	-	-	ST'D. IS-1 REQ'D., CONNECT OUTLET PIPE TO DI, CONNECT UD-4 TO DI
	6-6 TO 6-12	90	-	-	-	-	-	-	
	6-7	-	-	-	-	-	-	-	ST'D. IS-1 REQ'D., CONNECT UD-4 TO DI
	6-7 TO 6-8	7	-	-	-	-	-	-	
	6-8	-	-	-	-	-	-	-	ST'D. IS-1 REQ'D., CONNECT UD-4 TO DI, CONNECT TO EXISITNG 24" CONC. PIPE
	6-8 TO 7-2	258	-	-	-	-	-	-	
	6-9	-	-	-	-	-	-	-	ST'D. IS-1 REQ'D., GRATE B TYPE III REQ'D., CONNECT TO EXISTING 15" PIPE
	6-9 TO 6-10	45	-	-	-	-	-	-	
	EX43 TO 6-10	52	-	-	-	-	-	-	
	6-10	-	-	-	-	-	-	-	ST'D. IS-1 REQ'D.
	6-10 TO BOX-2	18	-	-	-	-	-	-	
	6-11	-	-	-	-	-	-	-	ST'D. IS-1 REQ'D., CONNECT TO EXISTING 27" CONC. PIPE, ST'D. B-1 BASE UNIT D=60"
	6-11 TO BOX-2	20	-	-	-	-	-	-	
	6-12	-	-	-	-	-	-	-	ST'D. IS-1 REQ'D., CONNECT UD-4 TO DI
SUBTOTAL		1226	-	-	-	-	-	-	

PROJECT	SHEET NO.
0029-151-105	2N(2A)

PROJECT MANAGER Wendy Black Sanford, City of Fairfax (703) 385-7889
SURVEYED BY Rinker Design Assoc., P.C. (703) 368-7373 (2011)
DESIGNED BY Adam D. Weischenbach, P.E., Rinker Design Assoc., P.C. (703) 368-7373
SUBSURFACE UTILITY PROVIDED BY Accumark (2011)

Drainage Summary

REVISED	STATE	STATE ROUTE	STATE PROJECT	SHEET NO.
	VA.	-	0029-151-105 P101, P102, R201, C501	2N(3)

DESIGN FEATURES RELATING TO CONSTRUCTION OR TO REGULATION AND CONTROL OF TRAFFIC MAY BE SUBJECT TO CHANGE AS DEEMED NECESSARY BY THE DEPARTMENT

⊗ Denotes items to be paid for on a basis of plan quantities in accordance with current VDOT Road and Bridge Specifications.

◎ Denotes non-pay item. Item shall be incidental to other drainage items.

DRAINAGE SUMMARY

PROJECT NUMBER	DRAINAGE LOCATION	HEIGHT OF COVER	STORM SEWER PIPE: STORM SEWER PIPE 15"	STORM SEWER PIPE 24"	STORM SEWER PIPE 30"	STORM SEWER PIPE 36"	STORM SEWER PIPE 42"	STORM SEWER PIPE 48"	STORM SEWER PIPE 54"	STORM SEWER PIPE 72"	CONCRETE PIPE 18"	DROP INLETS: NS DROP INLET T-DI-1	DROP INLET DI-2B L=4'	DROP INLET DI-2B L=6'	NS DROP INLET T-DI-2B L=6'	NS DROP INLET T-DI-2B L=10'	NS DROP INLET T-DI-2E L=6'	DROP INLET DI-3A	DROP INLET DI-3B L=4'	DROP INLET DI-3B L=6'	DROP INLET DI-3B L=8'	DROP INLET DI-3B L=10'	NS DROP INLET T-DI-3B L=10'	DROP INLET DI-3B L=12'	DROP INLET DI-3BB L=6'	DROP INLET DI-3BB L=12'	DROP INLET DI-3BB L=14'	DROP INLET DI-3C L=6'	DROP INLET DI-4D L=4'	DROP INLET DI-4E L=6'	DROP INLET DI-4EE L=6'	DROP INLET DI-4F L=8'	DROP INLET DI-7	NS ADJUST EXISTING DROP INLET (OR MODIFY STRUCTURE)	NS ADJUST EXISTING MANHOLE (OR MODIFY STRUCTURE)	MANHOLES: MANHOLE MH-1 OR 2	FRAME & COVER MH-1	1/2" STEEL PLATE	MONOLITHIC BOX	B-2 DOGHOUSE BASE UNIT	B-1 BASE UNIT	◎ CONCRETE SAFETY SLAB SL-1	EROS.CONTR.STONE CL.I EC-1 TYPE B	⊗ MINOR STR.EXCAV.PIPE	⊗ MINOR STR.EXCAV. BOX CULVERT	⊗ BEDDING MAT'L.AGGR. NO.25 OR 26	NS NO.57 STONE
	NUMBER	FT	01156	01246	01306	01366	01426	01486	01546	01726	01182	08990	06747	06748	08990	08990	08990	06815	06817	06818	06819	06820	08990	06821	06827	06830	06831	06835	07304	07308	07324	07406	07508	24831	24832	09056	09057	-	-	-	-	-	9150	211	212	505	27552
			L.F.	L.F.	L.F.	L.F.	L.F.	L.F.	L.F.	L.F.	L.F.	EA.	EA.	EA.	EA.	EA.	EA.	EA.	EA.	EA.	EA.	EA.	EA.	EA.	EA.	EA.	EA.	EA.	EA.	EA.	EA.	EA.	EA.	EA.	EA.	L.F.	EA.	EA.	EA.	EA.	EA.	EA.	TON	C.Y.	C.Y.	TON	TON
0029-151-105	6-12 TO 6-8	5	-	-	142	-	-	-	-	-	-	-	-	-	-	-	-	-	-	-	-	-	-	-	-	-	-	-	-	-	-	-	-	-	-	-	-	-	-	-	-	-	-	-	-	-	-
	6-13	-	-	-	-	-	-	-	-	-	-	-	1	-	-	-	-	-	-	-	-	-	-	-	-	-	-	-	-	-	-	-	-	-	-	-	-	-	-	-	-	-	-	-	-	-	-	-
	6-13 TO 6-4	3	-	125	-	-	-	-	-	-	-	-	-	-	-	-	-	-	-	-	-	-	-	-	-	-	-	-	-	-	-	-	-	-	-	-	-	-	-	-	-	-	-	-	-	-	-	-
	6-14	-	-	-	-	-	-	-	-	-	-	-	-	-	-	-	-	-	-	-	-	-	-	-	-	-	-	-	-	-	-	-	-	1	-	-	1	-	-	-	-	-	-	-	-	-	-	-
	7-1	-	-	-	-	-	-	-	-	-	-	-	-	-	-	-	-	-	-	-	-	1	-	-	-	-	-	-	-	-	-	-	-	-	-	-	-	-	-	-	-	-	-	-	-	-	-	-
	7-1 TO 7-2	4	4	-	-	-	-	-	-	-	-	-	-	-	-	-	-	-	-	-	-	-	-	-	-	-	-	-	-	-	-	-	-	-	-	-	-	-	-	-	-	-	-	-	-	-	-	-
	7-2	-	-	-	-	-	-	-	-	-	-	-	-	-	-	-	-	-	-	-	-	-	-	-	-	-	-	-	-	1	-	-	-	-	-	-	-	-	-	-	-	-	-	-	-	-	-	-
	7-2 TO 7-4	3	-	-	-	-	87	-	-	-	-	-	-	-	-	-	-	-	-	-	-	-	-	-	-	-	-	-	-	-	-	-	-	-	-	-	-	-	-	-	-	-	-	-	-	-	-	-
	7-3	-	-	-	-	-	-	-	-	-	-	-	-	-	-	-	-	-	-	-	-	1	-	-	-	-	-	-	-	-	-	-	-	-	-	-	-	-	-	-	-	-	-	-	-	-	-	-
	7-3 TO 7-4	3	5	-	-	-	-	-	-	-	-	-	-	-	-	-	-	-	-	-	-	-	-	-	-	-	-	-	-	-	-	-	-	-	-	-	-	-	-	-	-	-	-	-	-	-	-	-
	7-4	-	-	-	-	-	-	-	-	-	-	-	-	-	-	-	-	-	-	-	-	-	-	-	-	-	-	1	-	-	-	-	-	-	-	-	-	-	-	-	-	-	-	-	-	-	-	-
	7-4 TO 7-5	3	-	-	-	-	90	-	-	-	-	-	-	-	-	-	-	-	-	-	-	-	-	-	-	-	-	-	-	-	-	-	-	-	-	-	-	-	-	-	-	-	-	-	-	-	-	-
	7-5	-	-	-	-	-	-	-	-	-	-	-	-	-	-	-	-	-	-	-	-	-	-	-	-	-	-	-	-	1	-	-	-	-	-	-	-	-	-	-	-	-	-	-	-	-	-	-
	7-5 TO 7-6	2	-	-	-	-	-	62	-	-	-	-	-	-	-	-	-	-	-	-	-	-	-	-	-	-	-	-	-	-	-	-	-	-	-	-	-	-	-	-	-	-	-	127	-	12.1	18.1
	7-6	-	-	-	-	-	-	-	-	-	-	-	-	-	-	-	-	-	-	-	-	-	-	-	-	-	-	-	-	-	-	1	-	-	-	-	-	-	-	-	-	-	-	-	-	-	-	-
	7-6 TO 7-7	2	-	-	-	-	-	95	-	-	-	-	-	-	-	-	-	-	-	-	-	-	-	-	-	-	-	-	-	-	-	-	-	-	-	-	-	-	-	-	-	-	-	216	-	18.6	27.9
	7-7	-	-	-	-	-	-	-	-	-	-	-	-	-	-	-	-	-	-	-	-	-	-	-	-	-	-	1	-	-	-	-	-	-	-	-	-	-	-	-	-	-	-	-	-	-	-	-
	7-7 TO 8-1	4	-	-	-	-	-	69	-	-	-	-	-	-	-	-	-	-	-	-	-	-	-	-	-	-	-	-	-	-	-	-	-	-	-	-	-	-	-	-	-	-	-	186	-	13.6	20.4
	8-1	-	-	-	-	-	-	-	-	-	-	-	-	-	-	-	-	-	-	-	-	-	-	-	-	-	-	-	-	-	1	-	-	-	-	-	-	-	-	-	-	-	-	-	-	-	-	-
	8-1 TO 8-2	5	-	-	-	-	-	22	-	-	-	-	-	-	-	-	-	-	-	-	-	-	-	-	-	-	-	-	-	-	-	-	-	-	-	-	-	-	-	-	-	-	-	53	-	4.5	6.8
	8-2	-	-	-	-	-	-	-	-	-	-	-	-	-	-	-	-	-	-	-	-	-	-	-	-	-	-	-	-	-	-	-	-	-	-	-	-	-	-	-	-	-	-	-	-	-	-	-
	SUBTOTAL	-	9	125	142	-	177	248	-	-	-	-	1	-	-	-	-	-	-	-	-	2	-	-	-	-	-	-	2	2	1	1	-	1	-	-	1	-	-	-	-	-	582	-	48.8	73.2

PROJECT	SHEET NO.
0029-151-105	2N(3)

Rinker Design Associates, P.C.
Civil Engineering • Surveying • Land Planning
Transportation • Environmental
Right of Way Services
Office Locations
4121 Cox Colony Boulevard, Suite 100, Chesterfield, VA 23832 Tel: (804) 717-1000
4121 Cox Colony Boulevard, Suite 100, Chesterfield, VA 23832 Tel: (804) 717-1000
4121 Cox Colony Boulevard, Suite 100, Chesterfield, VA 23832 Tel: (804) 717-1000
4121 Cox Colony Boulevard, Suite 100, Chesterfield, VA 23832 Tel: (804) 717-1000
www.RinkerDesign.com

Office Locations
Rinker Design Associates, P.C.
Civil Engineering - Surveying - Land Planning
Transportation - Environmental
Right of Way Services
Main Office
10437 Innovation Drive
Suite 400
Manassas, VA 20110
Phone: (703) 257-5960
Fax: (703) 257-5961
Office Mgr. Carl Wolfe
Office Mgr. Jeff Wolfe
Office Mgr. Jeff Wolfe
Office Mgr. Jeff

PROJECT MANAGER Wendy Black Sanford, City of Fairfax (703) 385-7889
SURVEYED BY Rinker Design Assoc., P.C. (703) 368-7373 (2011)
DESIGNED BY Adam D. Weischenbach, P.E., Rinker Design Assoc., P.C. (703) 368-7373
SUBSURFACE UTILITY PROVIDED BY Accumark (2011)

Drainage Summary

REVISED	STATE	STATE ROUTE	STATE PROJECT	SHEET NO.
	VA.	-	0029-151-105 P101, P102, R201, C501	2N(4)

DESIGN FEATURES RELATING TO CONSTRUCTION OR TO REGULATION AND CONTROL OF TRAFFIC MAY BE SUBJECT TO CHANGE AS DEEMED NECESSARY BY THE DEPARTMENT

⊗ Denotes items to be paid for on a basis of plan quantities in accordance with current VDOT Road and Bridge Specifications.

◎ Denotes non-pay item. Item shall be incidental to other drainage items.

DRAINAGE SUMMARY TOTALS

PROJECT NUMBER	SHEET	HEIGHT OF COVER	STORM SEWER PIPE: STORM SEWER PIPE 15"	STORM SEWER PIPE 24"	STORM SEWER PIPE 30"	STORM SEWER PIPE 36"	STORM SEWER PIPE 42"	STORM SEWER PIPE 48"	STORM SEWER PIPE 54"	STORM SEWER PIPE 72"	CONCRETE PIPE 18"	DROP INLETS: NS DROP INLET T-DI-1	DROP INLET DI-2B L=4'	DROP INLET DI-2B L=6'	NS DROP INLET T-DI-2B L=6'	NS DROP INLET T-DI-2B L=10'	NS DROP INLET T-DI-2E L=6'	DROP INLET DI-3A	DROP INLET DI-3B L=4'	DROP INLET DI-3B L=6'	DROP INLET DI-3B L=8'	DROP INLET DI-3B L=10'	NS DROP INLET T-DI-3B L=10'	DROP INLET DI-3B L=12'	DROP INLET DI-3BB L=6'	DROP INLET DI-3BB L=12'	DROP INLET DI-3BB L=14'	DROP INLET DI-3C L=6'	DROP INLET DI-4D L=4'	DROP INLET DI-4E L=6'	DROP INLET DI-4EE L=6'	DROP INLET DI-4F L=8'	DROP INLET DI-7	NS ADJUST EXISTING DROP INLET (OR MODIFY STRUCTURE)	NS ADJUST EXISTING MANHOLE (OR MODIFY STRUCTURE)	MANHOLES: MANHOLE MH-1 OR 2	MANHOLE MH-2	FRAME & COVER MH-1	1/2" STEEL PLATE	MONOLITHIC BOX	B-2 DOGHOUSE BASE UNIT	B-1 BASE UNIT	◎ CONCRETE SAFETY SLAB SL-1	EROS.CONTR.STONE CL.I EC-1 TYPE B	⊗ MINOR STR.EXCAV.	⊗ MINOR STR.EXCAV. BOX CULVERT	⊗ BEDDING MATL.AGGR. NO.25 OR 26	NS NO.57 STONE
	NUMBER	FT	01156	01246	01306	01366	01426	01486	01546	01726	01182	08990	06747	06748	08990	08990	08990	06815	06817	06818	06819	06820	08990	06821	06827	06830	06831	06835	07304	07308	07324	07406	07508	24831	24832	LF. 09056	LF. 09055	09057	-	-	-	-	-	9150	211	212	505	27552
			LF.	LF.	LF.	LF.	LF.	LF.	LF.	LF.	LF.	EA.	EA.	EA.	EA.	EA.	EA.	EA.	EA.	EA.	EA.	EA.	EA.	EA.	EA.	EA.	EA.	EA.	EA.	EA.	EA.	EA.	EA.	EA.	EA.	EA.	EA.	EA.	EA.	EA.	EA.	EA.	EA.	TON	C.Y.	C.Y.	TON	TON
0029-151-105	2N	-	454	-	-	127	-	-	-	-	-	-	-	-	-	1	2	-	3	1	2	-	-	-	-	1	1	1	-	-	-	-	2	2	3	25	-	10	2	-	7	-	-	269	-	23324	1167	1753
	2N(1)	-	318	-	26	-	-	-	17	17	-	-	-	-	2	-	-	2	2	3	2	-	-	1	1	-	-	-	-	-	-	-	1	5	2	6.2	5.8	9	5	1	2	1	1	-	120	-	7.5	11.2
	2N(2)	-	265	90	609	258	-	-	-	-	4	1	-	1	-	-	-	-	6	3	1	2	1	-	-	-	-	-	1	-	-	-	1	1	1	13	-	3	-	-	1	1	-	-	-	-	-	-
	2N(3)	-	9	125	142	-	177	248	-	-	-	-	1	-	-	-	-	-	-	-	-	2	-	-	-	-	-	-	2	2	1	1	-	1	-	-	-	1	-	-	-	-	-	-	582	-	48.8	73.2
GRAND TOTAL		-	1046	215	777	385	177	248	17	17	4	1	1	1	2	1	2	2	11	7	5	4	1	1	1	1	1	1	3	2	1	1	4	9	6	44.2	5.8	23	7	1	10	2	1	269	702	23324	1223.3	1837.4

DRAINAGE SUMMARY TOTALS

PROJECT NUMBER	SHEET	POST INSTALLATION INSPECTION (PIPE)	CONCRETE CLASS A4 BOX CULVERT	REINF.STEEL	CONCRETE CLASS A3 (JB-1)	REINF.STEEL (JB-1)	STRUCT.STEEL (JB-1)	POST INSTALLATION INSPECTION (CULVERT)	DI-PRECAST TOP (VARIOUS TYPES) (ST'D T-DI-3, TYPE B NOSE, L=8')
	NUMBER	00700 LF.	00522 C.Y.	00540 LB.	00525 C.Y.	00540 LB.	00560 LB.	00700 LF.	14506 EA
0029-151-105	2N(A)	581	3746	635665	-	-	-	1977	-
	2N(1A)	378	-	-	73.6	19174	40	-	1
	2N(2A)	1226	-	-	-	-	-	-	-
	2N(3A)	701	13	853	-	-	-	-	-
GRAND TOTAL		2886	3759	636518	73.6	19174	40	1977	1

EROSION AND SEDIMENT CONTROL SUMMARY

SUMMARY NOTES / ITEM DESCRIPTION	INLET PROTECTION, TYPE A	INLET PROTECTION, TYPE B	CULVERT INLET PROTECTION	OUTLET PROTECTION	TREE PROTECTION	CHECK DAM, ROCK TY. II	SILTATION CONTROL EXCAVATION	TEMP. SILT FENCE	DEWATERING BASIN	SOIL STAB. MAT EC-3 TYPE B	DRY RIPRAP CLASS AI (PG-3)	DRY RIPRAP CLASS II (PG-3)
ITEM NO.	27451	27461	-	-	-	27415	27430	27505	27422	27326	26117	69639
UNIT	EA.	EA.	EA.	EA.	EA.	EA.	C.Y.	L.F.	EA.	S.Y.	TON	TON
PHASE 1	11	35	1	6	11	-	776	3047	7	-	-	-
PHASE 2	7	58	2	2	-	5	701	2204	-	186	2.9	1848
TOTAL	18	93	3	8	11	5	1477	5251	7	186	2.9	1848

DRAINAGE INCIDENTALS SUMMARY

SUMMARY NOTES / ITEM DESCRIPTION	FLOWABLE BACKFILL (FOR ABANDONED PIPES)	CONCRETE PLUG FOR EXIST. PIPES (PP-1)	NS REMOVE EXIST. DROP INLET	NS REMOVE EXIST. MANHOLE	NS REMOVE EXIST. ENDWALL	NS REMOVE EXIST. PIPE	NS ABANDON IN PLACE (EXISTING PIPE)
ITEM NO.	00529	-	24801	24802	24803	24501	-
UNIT	C.Y.	C.Y.	E.A.	E.A.	E.A.	L.F.	L.F.
SHEET NO. 3	-	-	-	-	-	-	-
4	-	-	3	-	-	56	-
5	-	-	9	2	-	569	-
5C	-	-	1	-	-	-	-
5E	-	-	2	-	-	261	-
5G	-	-	1	-	-	-	-
6	-	-	7	-	2	379	241
7	-	-	5	-	4	363	195
8	-	-	-	-	-	-	-
TOTAL	10	3	28	2	6	1628	436

UNDERDRAIN SUMMARY

SUMMARY NOTES / ITEM DESCRIPTION	UNDERDRAIN UD-4 (PERF.)	UNDERDRAIN UD-4 (NON-PERF.)	OUTLET PIPE
ITEM NO.	00588	00588	00595
UNIT	L.F.	L.F.	L.F.
SHEET NO. 3	122	-	-
4	941	191	59
5	1896	241	182
5C	555	94	10
5E	598	159	77
5G	335	-	5
6	1470	178	88
7	1156	58	64
8	119	-	10
TOTAL	7192	921	495

Rinker Design Associates, P.C.
Civil Engineering • Surveying • Land Planning
Transportation • Environmental
Right of Way Services
Office Locations
4121 Wilson Boulevard, Suite 101, Arlington, VA 22203, Tel: (703) 385-7889
2011 Crystal Grove Drive, Lansdowne, PA 19050, Tel: (610) 626-2000, Fax: (610) 626-2001
4121 Cox Colvin & Beardsley Road, Suite 200, Glen Allen, VA 23060, Tel: (804) 747-1758, Fax: (804) 747-5160
5000 Dawson Boulevard, Suite 101, Norcross, GA 30093, Tel: (770) 279-8425, Fax: (770) 279-8426

PROJECT MANAGER Wendy Black Sanford, City of Fairfax (703) 385-7889
SURVEYED BY Rinker Design Assoc., P.C. (703) 368-7373 (2011)
DESIGNED BY Adam D. Weischenbach, P.E., Rinker Design Assoc., P.C. (703) 368-7373
SUBSURFACE UTILITY PROVIDED BY Accumark (2011)

Underdrain Summary

REVISED	STATE	STATE ROUTE	STATE PROJECT	SHEET NO.
	VA.	-	0029-151-105 P101, P102, R201, C501	2N(5)

DESIGN FEATURES RELATING TO CONSTRUCTION OR TO REGULATION AND CONTROL OF TRAFFIC MAY BE SUBJECT TO CHANGE AS DEEMED NECESSARY BY THE DEPARTMENT

UNDERDRAIN SUMMARY

STATION TO STATION	RIGHT, LEFT, OR MEDIAN	ROADWAY	UD-4 PERF. LF.	UD-4 NON-PERF. LF.	OUTLET PIPE LF.	NOTES
15+87 TO 17+78	MEDIAN LT.	FAIRFAX BLVD	188	-	49	CONNECT TO STR.4-2
17+78 TO 18+83	MEDIAN LT.	FAIRFAX BLVD	104	-	-	CONNECT TO STR.4-2
15+87 TO 17+77	MEDIAN RT.	FAIRFAX BLVD	191	-	-	CONNECT TO STR.4-2
17+77 TO 18+83	MEDIAN RT.	FAIRFAX BLVD	106	-	-	CONNECT TO STR.4-2
16+75 TO 17+75	RT.	FAIRFAX BLVD	105	-	5	CONNECT TO STR.4-2
17+75 TO 17+78	RT.	FAIRFAX BLVD	3	-	-	
17+78 TO 18+25	RT.	FAIRFAX BLVD	-	46	-	
18+25 TO 20+21	RT.	FAIRFAX BLVD	192	-	-	CONNECT TO STR.4-5
20+22 TO 20+28	RT.	FAIRFAX BLVD	9	-	-	
20+28 TO 20+70	RT.	FAIRFAX BLVD	-	42	-	
20+70 TO 20+90	RT.	FAIRFAX BLVD	20	-	-	
20+91 TO 21+40	RT.	FAIRFAX BLVD	-	52	-	
21+40 to 22+00	RT.	FAIRFAX BLVD	52	-	5	CONNECT TO STR.4-7
22+00 to 22+30	RT.	FAIRFAX BLVD	30	-	-	
22+30 TO 22+78	RT.	FAIRFAX BLVD	-	51	-	
22+78 TO 22+83	RT.	FAIRFAX BLVD	5	-	-	CONNECT TO STR.4-15
22+90 TO 23+55	RT.	FAIRFAX BLVD	64	-	-	CONNECT TO STR.5-1
23+55 TO 24+12	LT.	FAIRFAX BLVD	52	-	5	CONNECT TO STR.5-10
24+12 TO 24+60	LT.	FAIRFAX BLVD	43	-	5	CONNECT TO STR.5-37
26+00 TO 28+75	MEDIAN LT.	FAIRFAX BLVD	272	-	-	CONNECT TO STR.5-20
28+75 TO 29+60	MEDIAN LT.	FAIRFAX BLVD	84	-	-	CONNECT TO STR.5-20
26+00 TO 28+75	MEDIAN RT.	FAIRFAX BLVD	272	-	58	CONNECT TO STR.5-20
28+75 TO 29+60	MEDIAN RT.	FAIRFAX BLVD	86	-	-	CONNECT TO STR.5-20
26+00 TO 26+35	LT.	FAIRFAX BLVD	78	-	-	
26+35 TO 26+78	LT.	FAIRFAX BLVD	-	42	-	
26+78 TO 27+20	LT.	FAIRFAX BLVD	36	-	5	CONNECT TO STR.5-18
27+20 TO 27+70	LT.	FAIRFAX BLVD	-	48	-	
27+70 TO 28+10	LT.	FAIRFAX BLVD	41	-	-	
28+10 TO 28+62	LT.	FAIRFAX BLVD	-	54	-	
28+62 TO 28+75	LT.	FAIRFAX BLVD	7	-	5	CONNECT TO STR.5-20
28+75 TO 28+85	LT.	FAIRFAX BLVD	95	-	5	CONNECT TO STR.5-22
28+55 TO 28+85	LT.	FAIRFAX BLVD	44	-	5	CONNECT TO STR.5-22
29+75 TO 29+78	LT.	FAIRFAX BLVD	34	-	5	CONNECT TO STR.5-24
29+78 TO 30+10	LT.	FAIRFAX BLVD	62	-	-	CONNECT TO STR.5-26
29+75 TO 30+10	LT.	FAIRFAX BLVD	45	-	5	CONNECT TO STR.5-27
30+10 TO 31+10	LT.	FAIRFAX BLVD	96	-	5	CONNECT TO STR.6-1
31+10 TO 32+00	LT.	FAIRFAX BLVD	89	-	-	CONNECT TO STR.6-13
30+10 TO 32+00	LT.	FAIRFAX BLVD	192	-	5	CONNECT TO STR.6-2
32+00 TO 32+15	LT.	FAIRFAX BLVD	14	-	5	CONNECT TO STR.6-2
32+00 TO 32+05	LT.	FAIRFAX BLVD	4	-	-	
32+05 TO 32+52	LT.	FAIRFAX BLVD	-	46	-	
32+52 TO 33+25	LT.	FAIRFAX BLVD	73	-	5	CONNECT TO STR.6-4
33+30 TO 33+50	LT.	FAIRFAX BLVD	21	-	-	
32+40 TO 33+25	LT.	FAIRFAX BLVD	87	-	-	CONNECT TO STR.6-3
33+25 TO 33+60	LT.	FAIRFAX BLVD	33	-	-	CONNECT TO STR.6-3
33+50 TO 34+15	LT.	FAIRFAX BLVD	-	66	-	
34+15 TO 35+00	LT.	FAIRFAX BLVD	80	-	-	CONNECT TO STR.6-6
SUBTOTAL			3009	447	177	

UNDERDRAIN SUMMARY

STATION TO STATION	RIGHT, LEFT, OR MEDIAN	ROADWAY	UD-4 PERF. LF.	UD-4 NON-PERF. LF.	OUTLET PIPE LF.	NOTES
35+00 TO 35+05	LT.	FAIRFAX BLVD	3	-	-	
34+80 TO 35+00	LT.	FAIRFAX BLVD	10	-	5	CONNECT TO STR.6-5
35+00 TO 35+10	LT.	FAIRFAX BLVD	4	-	5	CONNECT TO STR.6-5
35+05 TO 35+70	LT.	FAIRFAX BLVD	-	66	-	
35+70 TO 35+95	LT.	FAIRFAX BLVD	19	-	5	CONNECT TO STR.6-12
31+38 TO 35+00	MEDIAN RT.	FAIRFAX BLVD	333	-	43	CONNECT TO STR.6-6
31+38 TO 34+75	MEDIAN LT.	FAIRFAX BLVD	335	-	-	CONNECT TO STR.6-6
36+50 TO 37+38	LT.	FAIRFAX BLVD	101	-	5	CONNECT TO STR.6-8
37+00 TO 37+38	LT.	FAIRFAX BLVD	32	-	5	CONNECT TO STR.6-7
37+38 TO 40+00	LT.	FAIRFAX BLVD	254	-	5	CONNECT TO STR.7-2
37+30 TO 40+00	LT.	FAIRFAX BLVD	261	-	5	CONNECT TO STR.7-1
40+00 TO 40+88	LT.	FAIRFAX BLVD	84	-	5	CONNECT TO STR.7-4
40+00 TO 40+87	LT.	FAIRFAX BLVD	83	-	5	CONNECT TO STR.7-3
40+88 TO 41+00	LT.	FAIRFAX BLVD	10	-	-	
41+00 TO 41+60	LT.	FAIRFAX BLVD	-	58	-	
41+60 TO 41+83	LT.	FAIRFAX BLVD	18	-	5	CONNECT TO STR.7-5
41+85 TO 42+50	LT.	FAIRFAX BLVD	57	-	5	CONNECT TO STR.7-6
42+50 TO 43+45	LT.	FAIRFAX BLVD	91	-	5	CONNECT TO STR.7-6
43+50 TO 44+20	LT.	FAIRFAX BLVD	65	-	5	CONNECT TO STR.7-7
44+20 TO 44+75	LT.	FAIRFAX BLVD	54	-	5	CONNECT TO STR.8-1
38+30 TO 39+97	MEDIAN LT.	FAIRFAX BLVD	168	-	29	CONNECT TO STR.7-2
38+30 TO 39+97	MEDIAN RT.	FAIRFAX BLVD	157	-	-	CONNECT TO STR.7-2
62+30 TO 62+50	LT.	CHAIN BRIDGE RD	16	-	5	CONNECT TO STR.5C-5
62+50 TO 62+88	LT.	CHAIN BRIDGE RD	37	-	-	
62+88 TO 63+35	LT.	CHAIN BRIDGE RD	-	47	-	
63+35 TO 63+63	LT.	CHAIN BRIDGE RD	23	-	5	CONNECT TO STR.5C-2
63+63 TO 63+80	LT.	CHAIN BRIDGE RD	15	-	-	
63+80 TO 64+25	LT.	CHAIN BRIDGE RD	-	47	-	
64+25 TO 65+90	LT.	CHAIN BRIDGE RD	166	-	5	CONNECT TO STR.5-2
64+20 TO 65+90	MEDIAN LT.	CHAIN BRIDGE RD	175	-	-	CONNECT TO STR.5-2
65+90 TO 66+52	MEDIAN LT.	CHAIN BRIDGE RD	58	-	-	CONNECT TO STR.5-2
64+20 TO 65+90	MEDIAN RT.	CHAIN BRIDGE RD	175	-	-	CONNECT TO STR.5-2
65+90 TO 66+53	MEDIAN RT.	CHAIN BRIDGE RD	59	-	39	CONNECT TO STR.5-2
67+70 TO 68+25	LT.	CHAIN BRIDGE RD	54	-	5	CONNECT TO STR.5-9
68+25 to 68+88	LT.	CHAIN BRIDGE RD	59	-	5	CONNECT TO STR.5-8
68+88 to 69+30	LT.	CHAIN BRIDGE RD	36	-	5	CONNECT TO STR.5-8
69+30 to 70+00	LT.	CHAIN BRIDGE RD	68	-	5	CONNECT TO STR.5-7
70+00 to 71+12	LT.	CHAIN BRIDGE RD	107	-	5	CONNECT TO STR.5-6
71+12 to 71+62	LT.	CHAIN BRIDGE RD	-	48	-	
71+62 to 71+90	LT.	CHAIN BRIDGE RD	33	-	5	CONNECT TO STR.5E-4
71+87 to 71+90	LT.	CHAIN BRIDGE RD	2	-	5	CONNECT TO STR.5E-6
71+88 to 71+90	LT.	CHAIN BRIDGE RD	-	41	-	
71+88 to 71+88	LT.	CHAIN BRIDGE RD	5	-	-	
68+62 to 68+78	RT.	CHAIN BRIDGE RD	11	-	5	CONNECT TO STR.5-16
68+78 to 69+25	RT.	CHAIN BRIDGE RD	-	48	-	
69+25 to 69+29	RT.	CHAIN BRIDGE RD	4	-	-	
69+29 to 69+40	RT.	CHAIN BRIDGE RD	5	-	5	CONNECT TO STR.5-14
SUBTOTAL			3247	355	241	

UNDERDRAIN SUMMARY

STATION TO STATION	RIGHT, LEFT, OR MEDIAN	ROADWAY	UD-4 PERF. LF.	UD-4 NON-PERF. LF.	OUTLET PIPE LF.	NOTES
69+40 to 69+88	RT.	CHAIN BRIDGE RD	-	44	-	
69+88 to 70+60	RT.	CHAIN BRIDGE RD	70	-	-	
70+60 to 70+70	RT.	CHAIN BRIDGE RD	9	-	5	CONNECT TO STR.5-12
70+70 to 71+45	RT.	CHAIN BRIDGE RD	-	75	-	
71+45 TO 72+37	RT.	CHAIN BRIDGE RD	92	-	-	
72+37 TO 73+15	RT.	CHAIN BRIDGE RD	74	-	5	CONNECT TO STR.5E-2
71+62 TO 72+20	MEDIAN RT.	CHAIN BRIDGE RD	58	-	52	CONNECT TO STR.5E-4
71+62 TO 72+20	MEDIAN LT.	CHAIN BRIDGE RD	62	-	-	CONNECT TO STR.5E-4
74+75 TO 76+52	MEDIAN RT.	CHAIN BRIDGE RD	170	-	5	CONNECT TO STR.5E-3
76+52 TO 77+70	MEDIAN RT.	CHAIN BRIDGE RD	115	-	-	CONNECT TO STR.5G-1
74+75 TO 76+52	MEDIAN LT.	CHAIN BRIDGE RD	170	-	5	CONNECT TO STR.5E-3
76+52 TO 77+70	MEDIAN LT.	CHAIN BRIDGE RD	116	-	5	CONNECT TO STR.5G-1
SUBTOTAL			936	119	77	

Rinker Design Associates, P.C.
Civil Engineering · Surveying · Land Planning
Transportation · Environmental
Right of Way Services
Office Locations
4121 Cox Road, Suite 200, Glen Allen, VA 23060, Phone: (804) 262-8001, Fax: (804) 262-8003
4121 Carrington Boulevard, Suite 200, Glen Allen, VA 23060, Phone: (804) 262-8001, Fax: (804) 262-8003
9500 Harvest Boulevard, Suite 200, Manassas, VA 20110, Phone: (703) 368-7373, Fax: (703) 257-0444
4121 Cox Road, Suite 200, Glen Allen, VA 23060, Phone: (804) 262-8001, Fax: (804) 262-8003

PROJECT MANAGER Wendy Black Sanford, City of Fairfax (703) 385-7889
SURVEYED BY Rinker Design Assoc., P.C. (703) 368-7373 (2011)
DESIGNED BY Adam D. Weischenbach, P.E., Rinker Design Assoc., P.C. (703) 368-7373
SUBSURFACE UTILITY PROVIDED BY Accumark (2011)

Grading Summary

COMMONWEALTH OF VIRGINIA
MARK A. GUNN
Lic. No. 038323
PROFESSIONAL ENGINEER

Rinker Design Associates, P.C.
Manassas, Virginia
PROFESSIONAL ENGINEER

REVISED	STATE	STATE ROUTE	STATE PROJECT	SHEET NO.
	VA.	-	0029-151-105 P101, P102, R201, C501	2N(6)

DESIGN FEATURES RELATING TO CONSTRUCTION OR TO REGULATION AND CONTROL OF TRAFFIC MAY BE SUBJECT TO CHANGE AS DEEMED NECESSARY BY THE DEPARTMENT

⊗ Denotes items to be paid for on a basis of plan quantities in accordance with current VDOT Road and Bridge Specifications.

(1) Cut quantity shown does not include the material removed as Demolition of Pavement.

(2) Quantity shown for use in Grading Diagram only. See other Summaries for pay item(s).

(3) Included in Total Regular Excavation.

(4) Included in Roadway Cut quantity.

(5) Quantities for Temporary Sediment Basins and Temporary Sediment Traps are included with the Stormwater Management Basin quantities.

(6) Denotes pay item.

(7) Included in total fill quantity.

(8) This quantity comes from the computer listings and/or manual cross-sections and has been adjusted to exclude other quantities.

(9) Volumes obtained for Cut Ditches and Fill Ditches not included in computer listings.

(10) Includes settlement of in-place soil.

(11) Surplus is not a pay item. Disposal of surplus material shall be incidental to other grading items.

Location	Roadway Cut (1) (8)	Root Mat in Cut Sections	Root Mat in Fill Sections	(9) Cut - Ditches	(9) Fill - Ditches	Unsuitable Material: Below Subgrade	Unsuitable Material: Above Subgrade	(6) Contaminated Material	(10) Roadway Fill (8)	Entrances: Cut	Entrances: Fill	⊗ Total Regular Excavation (6)	Total Fill	(2) Demolition of Pavement	Minor Structure (2) (6): Excavation	Minor Structure (6): Contaminated Material	(5) (2) Stormwater Management Basins: Cut	(5) (2) Stormwater Management Basins: Fill	(6) ((11)) Borrow (Surplus)
	C.Y.	C.Y.	C.Y.	C.Y.	C.Y.	C.Y.	C.Y.	C.Y.	C.Y.	C.Y.	C.Y.	C.Y.	C.Y.	C.Y.	C.Y.	C.Y.	C.Y.	C.Y.	C.Y.
Fairfax Boulevard (Rte. 29/50)	1,447	-	-	-	-	526	733	-	1,467	-	-	1,973	1,467	-	702	-	-	-	418
Chain Bridge Road (Rte. 123)	1,876	-	-	-	-	1,191	1,000	-	49	-	-	3,067	49	-	-	-	-	-	(815)
Box Culvert & Grading at Upstream End	6,784	-	-	-	-	-	-	1,500	-	-	-	6,784	-	-	23,324	500	-	-	(28,109)
FORMULAS	C	D	E	F	G	H	I	T	J	K	L	M	N	O	P	U	Q	R	S
TOTALS	(3) 10,107	(4) 0	(3) (7) 0	(3) 0	(7) 0	(3) 1,717	(4) 1,733	(4) 1,500	(7) 1,516	(3) 0	(7) 0	11,824	1,516	0	24,026	500	0	(7) 0	(28,506)

Notes:

1. Contaminated material exists within the Project Area. Contaminated material shall be handled, disposed of, and paid for in accordance with Contract Special Provisions.
2. Earthwork associated with median construction has not been measured and shall be incidental to median construction.
3. Entrance cut and fill has not been measured separately and shall be incidental to other entrance construction items.
4. Demolition of pavement has been assumed to be disposed of and not incorporated into the Grading Summary/quantities.

FORMULAS

Roadway Cut (C) = Unadjusted Cut from Computer Listings or Manual Cross-Sections minus (-) Demolition of Pavement.

Roadway Fill (J) = Fill Required plus (+) Material for Backfill of Demolition of Pavement Areas in Fill (for heights of fill < 3 feet below subgrade).

Unsuitable Materials Below Subgrade (H) shall be replaced with VDOT Select Material Type I (minimum CBR 30).

Total Reg. Excav. (M) = C + E + F + H + K

Total Fill (N) = J + E + G + L + R

Borrow (S) = [N - ([C + F + K + (P - U) + Q - D - I - T] x Compaction Factor)] ÷ Compaction Factor for Borrow Site

The borrow quantity shown was computed on the basis of the average shrinkage or swell factor for the general vicinity of the project. The Contractor shall be responsible for determining the actual factor for the site(s) from which he or she proposes to secure borrow material needed to complete this project.

Rinker Design Associates, P.C.
Civil Engineering - Surveying - Land Planning
Transportation - Environmental
Right of Way Services
Office Locations
4/20/2016

PROJECT MANAGER Wendy Black Sanford, City of Fairfax (703) 385-7889
SURVEYED BY Rinker Design Assoc., P.C. (703) 368-7373 (2011)
DESIGNED BY Adam D. Weischenbach, P.E., Rinker Design Assoc., P.C. (703) 368-7373
SUBSURFACE UTILITY PROVIDED BY Accumark (2011)

Pavement Summary

REVISED	STATE	STATE ROUTE	STATE PROJECT	SHEET NO.
	VA.	-	0029-151-105 P101, P102, R201, C501	2N(7)

DESIGN FEATURES RELATING TO CONSTRUCTION OR TO REGULATION AND CONTROL OF TRAFFIC MAY BE SUBJECT TO CHANGE AS DEEMED NECESSARY BY THE DEPARTMENT

	LOCATION	MAINLINE AND PARKING LOT										SIDEWALK AND BUS PADS	ENTRANCES					
				BASE			SUB BASE						TYPE II		TYPE IV			
		SURFACE	INTER-MEDIATE							OVERLAY	UNSUITABLE REPLACEMENT		SURFACE	SUB BASE	SURFACE	BASE	SUB BASE	OVERLAY
		ASPHALT CONCRETE TY.SM-9.5D @ 110 LBS/SY./INCH	ASPHALT CONCRETE TY.IM-19.0A @ 110 LBS/SY./INCH	ASPHALT CONCRETE TY.BM-25.0A @ 122 LBS/SY./INCH	ASPHALT CONCRETE TY.BM-25.0A @ 122 LBS/SY./INCH	ASPHALT CONCRETE TY.BM-25.0A @ 122 LBS/SY./INCH	AGGR.BASE MATL.TY.F NO.21A PUGMILL MIXED WITH 4% HYDRAULIC CEMENT BY WEIGHT (CTA) @ 163 LB/FT3	AGGR.BASE MATL.TY.I NO.21B @ 163 LBS/FT3	AGGR.BASE MATL.TY.I NO.21B @ 163 LBS/FT3	ASPHALT CONCRETE TY.SM-9.5D @ 110 LBS/SY./INCH	VDOT SELECT MATERIAL TYPE I (MINIMUM CBR 30)	AGGR.BASE MATL.TY.I NO.21B @ 163 LBS/FT3	HES CONCRETE @ 7" DEPTH	AGGR.BASE MATL.TY.I NO.21B @ 163 LBS/FT3	ASPHALT CONCRETE TY.SM-9.5A @ 165 LBS/SY.	ASPHALT CONCRETE TY.BM-25.0A @ 122 LBS/SY./INCH	AGGR.BASE MATL.TY.I NO.21B @ 163 LBS/FT3	ASPHALT CONCRETE TY.SM-9.5A @ 165 LBS/SY.
	ITEM NO.	10636	10610	10642	10642	10642	10013	10128	10128	10636	00272	10128	11040	10128	10635	10642	10128	10635
SHEET No.	ROADWAY	1.5 In DEPTH	2 In DEPTH	3 In DEPTH	9 In DEPTH	10 In DEPTH	8 In DEPTH	8 In DEPTH	12 In DEPTH	1.5 In DEPTH	24 In DEPTH	4 In DEPTH	7 In DEPTH	4 In DEPTH	1.5 In DEPTH	9 In DEPTH	6 In DEPTH	1.5 In DEPTH
		TON	TON	TON	TON	TON	TON	TON	TON	TON	C.Y.	TON	S.Y.	TON	TON	TON	TON	TON
3	Route 29/50	3	4	-	18	-	18	-	13	27	-	-	-	-	-	-	-	-
4	Route 29/50	57	76	-	377	-	191	-	521	406	496	86	45	11	26	75	145	11
5	Route 29/50	48	64	-	317	-	224	-	375	393	30	89	-	-	-	-	-	-
5	Route 123	129	172	-	-	950	228	-	1,047	273	675	98	-	-	1	2	7	1
5	Parking Lot	154	205	340	-	-	-	1,024	-	42	-	-	123	35	-	-	-	-
5C	Route 123	24	32	-	-	177	52	-	255	175	142	64	-	-	15	42	83	8
5E	Route 123	88	117	-	-	644	150	-	746	321	338	44	-	-	14	41	80	4
5E	Parking Lot	4	5	7	-	-	-	22	-	9	-	-	-	-	-	-	-	-
5G	Route 123	9	11	-	-	61	27	-	76	122	37	-	-	-	-	-	-	-
6	Route 29/50	62	83	-	411	-	356	-	333	306	-	102	9	3	-	-	-	-
6	Parking Lot	266	355	590	-	-	-	1,671	-	73	-	-	-	-	-	-	-	-
7	Route 29/50	49	65	-	323	-	154	-	488	270	-	87	-	-	-	-	-	-
7	Parking Lot	156	207	345	-	-	-	992	-	58	-	-	-	-	-	-	-	-
8	Route 29/50	25	33	-	162	-	21	-	242	82	-	23	-	-	-	-	-	-
	TOTAL	1,074	1,429	1,282	1,608	1,832	1,421	3,709	4,096	2,557	1,718	593	177	49	56	160	315	24

Rinker Design Associates, P.C.
Civil Engineering • Surveying • Land Planning
Transportation • Environmental
Right of Way Services
Office Locations
9140 Center Pointe Drive, Suite 400, Fairfax, VA 22031 Phone: (703) 368-7373 Fax: (703) 573-1460
9515 Courthouse Boulevard, Suite 100, Glen Allen, VA 23060 Phone: (804) 262-8100 Fax: (804) 262-8200
5000 Dawson Boulevard, Suite 101, Newport News, VA 23605 Phone: (757) 245-0445 Fax: (757) 245-0447
www.RDA.com

PROJECT MANAGER Wendy Block Sanford, City of Fairfax (703) 385-7889
SURVEYED BY Rinker Design Assoc., P.C. (703) 368-7373 (2011)
DESIGNED BY Adam D. Weischenbach, P.E., Rinker Design Assoc., P.C. (703) 368-7373
SUBSURFACE UTILITY PROVIDED BY Accumark (2011)

Incidental Summary

REVISED	STATE	STATE ROUTE	STATE PROJECT	SHEET NO.
	VA.	-	0029-151-105 P101, P102, R201, C501	2N(8)

DESIGN FEATURES RELATING TO CONSTRUCTION OR TO REGULATION AND CONTROL OF TRAFFIC MAY BE SUBJECT TO CHANGE AS DEEMED NECESSARY BY THE DEPARTMENT

VDOT ITEM	SPEC	Description	Units	Total	By Plan Sheet 3	4	5	5C	5E	5G	6	7	8
		GENERAL CONSTRUCTION											
00100	513	MOBILIZATION	LS	1	-	-	-	-	-	-	-	-	-
00101	517	CONSTRUCTION SURVEYING (CONSTR.)	LS	1	-	-	-	-	-	-	-	-	-
	ATTD	SITE WORK	LS	1	-	-	-	-	-	-	-	-	-
	ATTD	NS IMPLEMENTATION OF SOIL & GROUNDWATER MANAGEMENT PLAN	LS	1	-	-	-	-	-	-	-	-	-
	ATTD	NS OFFSITE DISPOSAL OF CONTAMINATED GROUNDWATER	GAL	50000	-	-	-	-	-	-	-	-	-
		INCIDENTAL ITEMS											
10628	515	FLEXIBLE PAVE. PLANING 0"-2"	SY	31174	317	5045	8561	2207	4025	1477	4586	3964	992
11070	315	NS SAW CUT ASPH. CONC. (ROADWAY)	LF	15733	177	2452	4712	853	1682	373	3038	2071	375
11070	315	NS SAW CUT ASPH. CONC. (ASPHALT DRIVEWAY/PARKING LOT)	LF	2350	-	-	1003	-	96	-	882	369	-
12020	502	STD. CURB CG-2	LF	1486	-	168	948	34	68	-	194	29	45
12022	502	RADIAL CURB CG-2	LF	405	-	4	260	5	36	-	67	33	-
12600	502	STD. COMB. CURB & GUTTER CG-6	LF	4088	-	612	959	365	258	-	901	898	95
12610	502	RADIAL COMB. CURB & GUTTER CG-6	LF	718	-	63	389	30	94	-	102	-	40
12720	502	NS COMB. CURB & GUTTER (MODIFIED CG-6)	LF	21	-	-	-	-	21	-	-	-	-
12725	502	NS RADIAL COMB. CURB & GUTTER (RADIAL CG-6R)	LF	31	-	-	31	-	-	-	-	-	-
12725	502	NS RADIAL COMB. CURB & GUTTER (MODIFIED RADIAL CG-6)	LF	11	-	-	-	-	11	-	-	-	-
13114	502	ENTRANCE GUTTER CG-13	SY	924	-	188	233	91	166	-	186	60	-
13108	ATTD	CG-12 DETECTABLE WARNING SURFACE	SY	150	-	24	54	14	20	-	27	6	5
13212	503	R/W MONUMENT RM-2	EA	69	-	9	28	12	7	-	9	2	2
13220	504	HYDR. CEMENT CONC. SIDEWALK 4"	SY	2091	-	317	698	147	159	-	374	311	85
13222	504	HYDR. CEMENT CONC. SIDEWALK 7"	SY	260	-	60	80	30	40	-	40	10	-
13244	502	NS SAW CUT CONCRETE (NS SAW CUT H.C.C. ITEMS)	LF	229	-	32	197	-	-	-	-	-	-
13244	502	NS SAW CUT CONCRETE MEDIAN (NS SAW CUT H.C.C. ITEMS)	LF	1	1	-	-	-	-	-	-	-	-
13315	505	GUARDRAIL TERMINAL GR-11	EA	1	-	-	-	-	-	-	-	-	1
13320	505	GUARDRAIL GR-2	LF	58	-	-	-	-	-	-	-	-	58
13331	505	RAD. GUARDRAIL GR-2	LF	38	-	-	-	-	-	-	-	-	38
14440	ATTD	SAW CUT SIDEWALK	LF	102	-	38	15	10	4	-	25	-	10
14450	ATTD	SAW CUT CURB AND GUTTER	LF	76	-	23	12	18	10	-	8	2	3
21020	502	MEDIAN STRIP MS-1	SY	525	-	-	48	-	-	-	281	167	29
21110	502	MEDIAN STRIP MS-1A	SY	540	-	210	148	20	162	-	-	-	-
21215	502	MEDIAN STRIP MS-2	LF	2734	122	467	875	312	357	349	-	252	-
24410	508	DEMOLITION OF PAVEMENT (ROADWAY)	SY	12534	79	1087	3923	423	755	43	3806	2132	286
24501	510	NS REMOVE EXIST. HANDRAIL	LF	77	-	24	-	-	-	-	53	-	-
24600	510	REMOVE EXISTING GUARDRAIL	LF	192	-	-	-	-	-	-	-	58	134
25003	504	HANDRAIL HR-1 TYPE II	LF	260	-	-	185	-	-	-	-	-	75
25003	504	HANDRAIL HR-1 TYPE II WITH GRIPPING RAIL	LF	10	-	10	-	-	-	-	-	-	-
25506	514	FIELD OFFICE TY.II	MONTHS	30	-	-	-	-	-	-	-	-	-
	ATTD	NS BUS SHELTER (CITY OF FAIRFAX)	EA	2	-	-	-	1	-	-	1	-	-
	ATTD	NS DEMOLISH EXIST. STRUCTURE (APPROX. 45'x16' CULVERT UNDER PARKING AREA PARCEL 011)	EA	1	-	-	-	-	-	-	1	-	-
	ATTD	NS UTILITY PROTECTION PLAN	LS	1	-	-	-	-	-	-	-	-	-
	516	NS DEMOLITION WITH ACM (PARCEL 006) (D-01)	LS	1	-	-	-	-	-	-	-	-	-
	516	NS DEMOLITION WITH ACM (PARCEL 010) (D-02)	LS	1	-	-	-	-	-	-	-	-	-
	516	NS DEMOLITION WITH ACM (PARCEL 011) (D-03)	LS	1	-	-	-	-	-	-	-	-	-
	516	NS DEMOLITION WITH ACM (PARCEL 011) (D-04)	LS	1	-	-	-	-	-	-	-	-	-

Rinker Design Associates, P.C.
Civil Engineering • Surveying • Land Planning
Transportation • Environmental
Right of Way Services
Office Locations
4121 Cox Road, Suite 200, Glen Allen, VA 23060, Tel: (804) 747-1758, Fax: (804) 747-5960
4121 Cox Road

PROJECT MANAGER Wendy Black Sanford, City of Fairfax (703) 385-7889
SURVEYED BY Rinker Design Assoc., P.C. (703) 368-7373 (2011)
DESIGNED BY Adam D. Weischenbach, P.E., Rinker Design Assoc., P.C. (703) 368-7373
SUBSURFACE UTILITY PROVIDED BY Accumark (2011)

Pavement Marking and Signage Summaries

REVISED	STATE	STATE ROUTE	STATE PROJECT	SHEET NO.
	VA.	-	0029-151-105 P101, P102, R201, C501	2N(9)

DESIGN FEATURES RELATING TO CONSTRUCTION OR TO REGULATION AND CONTROL OF TRAFFIC MAY BE SUBJECT TO CHANGE AS DEEMED NECESSARY BY THE DEPARTMENT

VDOT ITEM	SPEC	Description	Units	Total	By Plan Sheet			
					12	12(1)	12(2)	12(3)
		SIGNAGE						
24810	701	NS RESET EXIST. SIGN STRUCTURE (INCLUDES SIGNS, POSTS, AND NEW STP-1)	EA	1	-	1	-	-
50108	701	SIGN PANEL	SF	745	107	293	81	264
50430	700	SIGN POST STP-1, 2"	LF	378	84	266	14	14
50432	700	SIGN POST STP-1, 2 3/16" (FOR INNER POST ONLY, 6')	LF	96	24	42	6	24
50434	700	SIGN POST STP-1, 2 1/2"	LF	560	98	210	126	126
	701	NS U-STYLE BREAKWAY METAL POST (PAINTED WHITE, FOR RELOC. BUS STOP SIGNS)	LF	56	-	14	42	-
50490	700	CONCRETE FOUNDATION STP-1, TYPE A	EA	66	13	34	10	9
50863	701	REM.-DISPOSE SIGN STR. (INCLUDES SIGNS, POSTS, AND FOUNDATIONS)	EA	41	5	21	7	8
51238	700	CONC. FOUND. SIGNAL POLE PF-8 (FOR ROADWAY SIGN MAST ARMS)	CY	14	-	-	-	14
51425	700	NS SIGNAL POLE (MODIFIED, FOR ROADWAY SIGNS)	EA	2	-	-	-	2
51426	700	NS MAST ARM (60', MODIFIED, FOR ROADWAY SIGNS)	EA	1	-	-	-	1
51426	700	NS MAST ARM (50', MODIFIED, FOR ROADWAY SIGNS)	EA	1	-	-	-	1
51840	703	NS HANGER ASSEMBLY MODIFIED SMD-2 (FOR SIGNS INSTALLED ON MAST ARM)	EA	12	-	-	-	12
51840	703	NS HANGER ASSEMBLY MODIFIED SMD-2 (FOR SIGNS INSTALLED ON MAST ARM POLE)	EA	6	-	-	-	6
51951	510	INSTALL SIGN (ROADWAY SIGNS)	EA	131	28	67	16	20
51951	510	INSTALL SIGN (ROADWAY SIGNS ON MAST ARMS)	EA	6	-	-	-	6
51962	701	NS RELOCATE EXIST. SIGN AND POST	EA	10	1	2	6	1
55586	700	JUNCTION BOX JB-S1	EA	2	-	-	-	2
56050	700	BORED CONDUIT 2" (UNDER ADJACENT EX. SIDEWALK)	LF	245	-	-	-	245
56200	700	TRENCH EXCAVATION ECI-1	LF	200	-	-	-	200
51962	ATTD	NS RELOCATE WELCOME TO CITY OF FAIRFAX SIGN WITH LANDSCAPING AND LIGHTING/ELECTRICAL	LS	1	-	-	-	1

VDOT ITEM	SPEC	Description	Units	Total	By Plan Sheet			
					10	10(1)	10(2)	10(3)
		PAVEMENT MARKINGS						
54032	704	TY. B CL. I PAVE. LINE MARK. 4"	LF	19239	1792	9190	4903	3353
54037	704	TY. B CL. I PAVE. LINE MARK. 8"	LF	835	-	688	85	62
54042	704	TY. B CL. I PAVE. LINE MARK. 24"	LF	2873	137.5	1537	747	451
54105	512	ERAD. OF EXIST. PAVE. MARKING (PER 6" OF WIDTH PER LF)	LF	935	-	414	520	-
54106	512	ERAD. OF EXIST. NON-LINEAR PAVE. MARK.	SF	10	-	-	10	-
54217	704	SNOW PLOW. RAISED PAVE. MARKER ASPH. CONC.	EA	225	19	98	64	44
54300	704	PAVE. MESS. MARK. ELONG. ARROW SINGLE	EA	42	8	22	9	3
54310	704	PAVE. MESS. MARK. ELONG. ARROW DOUBLE	EA	1	-	-	1	-
54400	704	PAVEMENT MESSAGE MARK. "ONLY"	EA	7	2	3	-	2
54402	704	NS PAVE. MESSAGE MARKING (MERGE ARROW)	EA	3	-	1	-	2
54402	704	NS PAVE. MESSAGE MARKING (BLUE AND WHITE HANDICAP SPACE SYM.)	EA	2	-	-	2	-

NOTE: The Roadway Lighting Plan Summary can be found on sheet 15(3A).

Rinker Design Associates, P.C.
Civil Engineering • Surveying • Land Planning
Transportation • Environmental
Right of Way Services
Office Locations
4121 Wilson Boulevard, Suite 101, Arlington, VA 22203, Tel: (703) 368-7373, Fax: (703) 368-7374
4121 Carrington Boulevard, Suite 100, Glen Allen, VA 23060, Tel: (804) 262-8100, Fax: (804) 262-8101
4121 Cox Road, Suite 100, Glen Allen, VA 23060, Tel: (804) 262-8100, Fax: (804) 262-8101
5000 Discovery Boulevard, Suite 100, Mechanicsville, VA 23111, Tel: (804) 559-0300, Fax: (804) 559-0301
4121 Fairfax Pike, Stephenson, VA 22656, Tel: (540) 722-9800, Fax: (540) 722-9801

PROJECT MANAGER Wendy Black Sanford, City of Fairfax (703) 385-7889
SURVEYED BY Rinker Design Assoc., P.C. (703) 368-7373 (2011)
DESIGNED BY Adam D. Weischenbach, P.E., Rinker Design Assoc., P.C. (703) 368-7373
SUBSURFACE UTILITY PROVIDED BY Accumark (2011)

Traffic Signal Summary

REVISED	STATE	ROUTE	PROJECT	SHEET NO.
	VA.	-	0029-151-105 P101, P102, R201, C501	2N(10)

DESIGN FEATURES RELATING TO CONSTRUCTION OR TO REGULATION AND CONTROL OF TRAFFIC MAY BE SUBJECT TO CHANGE AS DEEMED NECESSARY BY THE DEPARTMENT

VDOT ITEM	SPEC	Description	Units	Total	By Plan Sheet 11(1)	11(2)	11(3)	11(4)	11(5)
		SIGNALS							
50108	701	SIGN PANEL	SF	557	160	20	171	206	-
51951	510	INSTALL SIGNS (FOR SIGNAL)	EA	48	14	3	14	17	-
51030	703	CONTROLLER	EA	4	1	1	1	1	-
51137	510	INSTALL CONTROLLER	EA	4	1	1	1	1	-
51160	700	ELEC. SERV. GROUNDING ELECTRODE (10')	EA	16	4	4	4	4	-
51170	703	ELECTRICAL SERVICE SE-5	EA	3	1	1	-	1	-
51184	703	TRAFFIC SIG. HEAD SEC 12" LED (WITH PARTIAL TUNNEL VISORS)	EA	164	75	15	34	40	-
51198	703	PEDESTRIAN ACTUATION PA-2	EA	20	8	2	6	4	-
51212	700	PEDESTAL POLE PF-2 12'	EA	20	8	4	4	4	-
51248	700	PEDESTAL POLE PF-2 5' (FOR SE-5)	EA	3	1	1	-	1	-
51234	700	CONC. FOUND. SIGNAL POLE PF-1	CY	62	40	10	6	6	-
51238	700	CONC. FOUND. SIGNAL POLE PF-8	CY	40	-	-	16	24	-
51240	700	CONC. FOUNDATION PF-2	EA	24	9	5	4	6	-
51245	700	CONCRETE FOUND. CF-1	EA	4	1	1	1	1	-
51600	700	14/2 CONDUCTOR CABLE	LF	3717	2035	160	611	911	-
51607	700	14/7 CONDUCTOR CABLE	LF	11923	6840	530	2025	2528	-
51840	703	NS HANGER ASSEMBLY SM-3, ONE WAY (IN-LINE)	EA	37	16	3	8	10	-
51840	703	NS HANGER ASSEMBLY SM-3, ONE WAY (CLUSTER)	EA	8	4	-	2	2	-
51838	703	HANGER ASSEMBLY SMB-3, ONE WAY (FOR PED. HEADS)	EA	20	8	2	6	4	-
51832	703	HANGER ASSEMBLY SMB-1, ONE WAY (SIGNAL HEADS ON PF-2)	EA	2	-	2	-	-	-
51840	703	NS HANGER ASSEMBLY SMD-2 (FOR SIGNAL SIGNS)	EA	80	23	5	24	28	-
51840	703	NS MODIFIED HANGER ASSEMBLY SMD-2 (FOR SIGNAL SIGNS INSTALLED ON SIGNAL POLE OR PF-2)	EA	2	-	-	-	2	-
52403	703	PEDESTRIAN SIGNAL HEAD SP-8	EA	20	8	2	6	4	-
55060	700	6 CONDUCTOR CABLE (#6 AWG)	LF	355	50	50	75	180	-
55343	700	ELECT. SERVICE SE-6	EA	1	-	-	1	-	-
55586	700	JUNCTION BOX JB-S1	EA	12	2	2	3	3	2
55587	700	JUNCTION BOX JB-S2	EA	15	5	3	3	4	-
55588	700	JUNCTION BOX JB-S3	EA	4	1	1	1	1	-
56021	700	1" PVC CONDUIT	LF	30	15	15	-	-	-
56026	700	1-1/4" METAL CONDUIT	LF	85	25	20	15	25	-
56030	700	2" CONDUIT	LF	275	150	-	25	-	100
56032	700	2" CONDUIT (M)	LF	50	-	-	25	25	-
56050	700	BORED CONDUIT 2"	LF	200	-	35	-	165	-
56034	700	3" CONDUIT	LF	2350	1370	500	189	291	-
56038	700	4" CONDUIT	LF	110	30	30	25	25	-
56052	700	BORED CONDUIT 4"	LF	1335	525	170	255	385	-
56200	700	TRENCH EXCAVATION ECI-1	LF	2480	1545	290	279	366	-
56205	700	TEST BORE (FOR SIGNAL POLE FOUNDATIONS)	EA	12	4	1	3	4	-
51963	ATTD	NS REMOVE EXISTING SIGNAL EQUIPMENT	LS	1	1	-	-	-	-
51963	ATTD	NS REMOVE EXISTING SIGNAL EQUIPMENT	LS	1	-	-	1	-	-
51963	ATTD	NS REMOVE EXISTING SIGNAL EQUIPMENT	LS	1	-	-	-	1	-

VDOT ITEM	SPEC	Description	Units	Total	By Plan Sheet 11(1)	11(2)	11(3)	11(4)	11(5)
		SIGNALS Cont.							
52002	ATTD	NS SIGNALIZATION TEST-PIT (EXIST. UTILITY LOCATION)	EA	75	20	15	20	20	-
52002	ATTD	NS SIGNALIZATION (UNINTERRUPTIBLE POWER SUPPLY)	EA	4	1	1	1	1	-
52002	ATTD	NS SIGNALIZATION (UPS BATTERY)	EA	32	8	8	8	8	-
52002	ATTD	NS SIGNALIZATION (UPS CABINET, TYPE B)	EA	4	1	1	1	1	-
51959	ATTD	NS MODIFY EXIST. SIGNAL INTERCONNECT CABLE/CONNECTION (COORD. WITH CITY)	LS	1	1	-	-	-	-
51960	ATTD	NS MODIFY EXIST. SIGNAL INTERCONNECT CABLE/CONNECTION (COORD. WITH CITY)	LS	1	-	-	1	-	-
51960	ATTD	NS MODIFY EXIST. SIGNAL INTERCONNECT CABLE/CONNECTION (COORD. WITH CITY)	LS	1	-	-	-	1	-
51614	ATTD	NS CONDUCTOR (12 SINGLE MODE FIBER OPTIC CABLE/INTERCONNECT CABLE)	LF	2365	1500	405	160	300	-
51614	ATTD	NS RELOCATE/RESET INTERCONNECT HANDHOLE TO NEW GRASS BUFFER	EA	2	-	-	-	-	2
51960	ATTD	NS PHONE ACCESS COMPARTMENT CC-2 AND MODEM	EA	4	1	1	1	1	-
51960	ATTD	NS CAT6 CABLE/CONDUCTOR (SOLID, SHIELDED, ALL WEATHER, DIRECT BURIAL/BLACK) [FOR CCTV]	LF	600	600	-	-	-	-
51960	ATTD	NS CCTV SWITCH/CONTROL IN CABINET	EA	1	1	-	-	-	-
51960	ATTD	NS CCTV CAMERA AND HOUSING (PELCO S5118-EG1) [ALL WEATHER/DURABLE]	EA	1	1	-	-	-	-
51960	ATTD	NS POE INJECTOR (NITEK IP10504) (FOR CCTV)	EA	1	1	-	-	-	-
51960	ATTD	NS CANDY CANE (48" MIN.) & BRACKET FOR MAST ARMS	EA	1	1	-	-	-	-
51960	ATTD	NS EMERG. PRE-EMPTION AUXILIARY OPTICAL DETECT. (WITH 2 CONFIR. LIGHTS)	EA	13	4	1	4	4	-
51960	ATTD	NS EMERGENCY PRE-EMPTION DETECTOR CABLE & CONDUCTOR	LF	3101	1230	95	752	1024	-
51960	ATTD	NS EMERGENCY PRE-EMPTION (1-WAY)	EA	1	-	1	-	-	-
51960	ATTD	NS EMERGENCY PRE-EMPTION (4-WAY)	EA	12	4	-	4	4	-
51541	700	NS DETECTOR (SENSYS VEH. DETECTION EQUIPT, RADIOS, ISOLATORS, CARDS ETC.)	LS	1	1	-	-	-	-
51541	700	NS DETECTOR (SENSYS VEH. DETECTION EQUIPT, RADIOS, ISOLATORS, CARDS ETC.)	LS	1	-	1	-	-	-
51541	700	NS DETECTOR (SENSYS VEH. DETECTION EQUIPT, RADIOS, ISOLATORS, CARDS ETC.)	LS	1	-	-	1	-	-
51541	700	NS DETECTOR (SENSYS VEH. DETECTION EQUIPT, RADIOS, ISOLATORS, CARDS ETC.)	LS	1	-	-	-	1	-
51541	700	NS DETECTOR (WIRELESS VEHICLE DETECTION ACCESS POINT, SENSYS)	EA	4	1	1	1	1	-
51541	700	NS DETECTOR (WIRELESS VEHICLE DETECTOR/MICRORADAR, SENSYS)	EA	155	63	12	35	45	-
51541	700	NS DETECTOR (WIRELESS VEHICLE DETECTION REPEATER, SENSYS)	EA	3	1	-	1	1	-
51541	700	NS DETECTOR CAT5 CABLE/CONDUCTOR FOR VEHICLE DETECTION	LF	1390	550	150	310	380	-
51425	700	NS MAST ARM (75')	EA	2	2	-	-	-	-
51425	700	NS MAST ARM (60')	EA	2	1	-	1	-	-
51425	700	NS MAST ARM (65')	EA	1	1	-	-	-	-
51425	700	NS MAST ARM (50')	EA	3	-	-	3	-	-
51425	700	NS MAST ARM (55')	EA	1	-	1	-	-	-
51426	700	NS MAST ARM (60') (MODIFIED ARM)	EA	3	-	-	-	3	-
51426	700	NS MAST ARM (50') (MODIFIED ARM)	EA	2	-	-	-	2	-
51425	700	NS SIGNAL POLE (MODIFIED DUAL ARMS)	EA	1	-	-	-	1	-
51425	700	NS SIGNAL POLE (MODIFIED SINGLE ARM)	EA	3	-	-	-	3	-
51425	700	NS SIGNAL POLE (DUAL ARMS)	EA	1	-	-	1	-	-
51425	700	NS SIGNAL POLE (SINGLE ARM)	EA	7	4	1	2	-	-

Rinker Design Associates, P.C.
Civil Engineering · Surveying · Land Planning
Transportation · Environmental
Right of Way Services
Office Locations
10027 Governor Lane Blvd. Williamsburg, VA 23188 Phone: (757) 565-1677 Fax: (757) 565-1567
4011 Campus Boulevard Suite 200 Glen Allen, VA 23060 Phone: (804) 673-7000 Fax: (804) 673-7020
9990 Fairfax Boulevard Suite 400 Fairfax, VA 22030 Phone: (703) 385-7889 Fax: (703) 385-7844
2013 Angle Green Drive Suite 100 Chesapeake, VA 23320 Phone: (757) 366-9000 Fax: (757) 366-9017

Rinker Design Associates, P.C.
Civil Engineering - Surveying - Land Planning
Transportation - Environmental
Right of Way Services
Office Locations
Gainesville, VA 20155 Tel: (703) 257-1044 Fax: (703) 257-1041
Glen Allen, VA 23060 Tel: (804) 747-1758 Fax: (804) 747-1760
Fredericksburg, VA 22407 Tel: (540) 373-8711 Fax: (540) 373-8711

PROJECT MANAGER Wendy Black Sanford, City of Fairfax (703) 385-7889
SURVEYED BY Rinker Design Assoc., P.C. (703) 368-7373 (2011)
DESIGNED BY Adam D. Weischenbach, P.E., Rinker Design Assoc., P.C. (703) 368-7373
SUBSURFACE UTILITY PROVIDED BY Accumark (2011)

Sanitary Sewer and Waterline Relocation Summaries

REVISED	STATE	STATE ROUTE	STATE PROJECT	SHEET NO.
	VA.	-	0029-151-105 P101, P102, R201, C501	2N(11)

DESIGN FEATURES RELATING TO CONSTRUCTION OR TO REGULATION AND CONTROL OF TRAFFIC MAY BE SUBJECT TO CHANGE AS DEEMED NECESSARY BY THE DEPARTMENT

VDOT ITEM	SPEC	Description	Units	Total	By Plan Sheet 13(0)	13(1)	13(2)	13(3)
		SANITARY						
42765	510	ADJUST EXIST FRAME & COVER	EA	1	-	1	-	-
24802	510	NS REMOVE EXIST. MANHOLE (SANITARY)	EA	6	2	3	1	-
49000	520	NS PLUG & ABANDON 8" SANITARY LINE PIPE	LF	200	-	40	-	160
49000	520	NS PLUG & ABANDON 12" SANITARY LINE PIPE	LF	181	181	-	-	-
49000	520	NS PLUG & ABANDON 15" SANITARY LINE PIPE	LF	1280	372	703	205	-
42771	520	RECONSTRUCT EXISTING SANITARY MANHOLE	EA	1	-	1	-	-
42080	520	8" SAN. SEWER PIPE	LF	245	-	40	-	205
42120	520	12" SAN. SEWER PIPE	LF	115	115	-	-	-
42150	520	15" SAN. SEWER PIPE	LF	1434	538	700	196	-
09056	302	MANHOLE MH-1 OR 2	EA	10	4	3	1	2
42708	520	8" SANITARY DROP CONNECTION	EA	2	-	2	-	-
42712	520	12" SANITARY DROP CONNECTION	EA	4	2	-	-	2
42715	520	15" SANITARY DROP CONNECTION	EA	1	-	-	1	-
45572	520	18" STEEL ENCASE. PIPE	LF	22	-	22	-	-
45582	520	24" STEEL ENCASE. PIPE	LF	22	22	-	-	-
42044	520	4" SANITARY SERVICE LATERAL CONNECTION	EA	1	-	-	-	1

VDOT ITEM	SPEC	Description	Units	Total	By Plan Sheet 14(2)	14(4)	14(5)	14(6)	14(7)
		WATERLINE							
40061	520	6" DI WATER MAIN	LF	1876	13	763	628	339	133
40081	520	8" DI WATER MAIN	LF	486	486	-	-	-	-
41006	520	6" GATE VALVE AND BOX	EA	31	2	14	3	4	8
41008	520	8" GATE VALVE AND BOX	EA	8	6	-	-	-	2
41012	520	12" GATE VALVE AND BOX	EA	2	-	-	-	2	-
41982	520	NS WATER FACILITIES - 6" 45 DEG. BEND	EA	46	-	22	8	10	6
41982	520	NS WATER FACILITIES - 8" 45 DEG. BEND	EA	9	9	-	-	-	-
41982	520	NS WATER FACILITIES - 6" 90 DEG. BEND	EA	5	2	2	1	-	-
41982	520	NS WATER FACILITIES - 6"X6" TEE FITTING	EA	7	-	4	1	1	1
41982	520	NS WATER FACILITIES - 8"X6" TEE FITTING	EA	2	1	-	-	-	1
41982	520	NS WATER FACILITIES - 8"X8" TEE FITTING	EA	1	1	-	-	-	-
41982	520	NS WATER FACILITIES - 16"X6" TEE FITTING	EA	1	-	-	-	1	-
41820	520	FIRE HYDRANT	EA	4	2	1	1	-	-
41815	520	2" BLOW-OFF VALVE & BOX	EA	1	-	1	-	-	-
40006	520	2" WATER SERVICE LINE (FOR SPIGOTS)	LF	200	-	200	-	-	-
41983	ATTD	NS WATER FACILITIES (LOCATE AND REPLACE SPIGOTS)	LS	1	-	1	-	-	-

PROJECT MANAGER Wendy Black Sanford, City of Fairfax (703) 385-7889
SURVEYED BY Rinker Design Assoc., P.C. (703) 368-7373 (2011)
DESIGNED BY Adam D. Weischenbach, P.E., Rinker Design Assoc., P.C. (703) 368-7373
SUBSURFACE UTILITY PROVIDED BY Accumark (2011)

VDOT Insertable Sheets

REVISED	STATE	STATE ROUTE	STATE PROJECT	SHEET NO.
	VA.	-	0029-151-105 P101, P102, R201, C501	2P

DESIGN FEATURES RELATING TO CONSTRUCTION OR TO REGULATION AND CONTROL OF TRAFFIC MAY BE SUBJECT TO CHANGE AS DEEMED NECESSARY BY THE DEPARTMENT

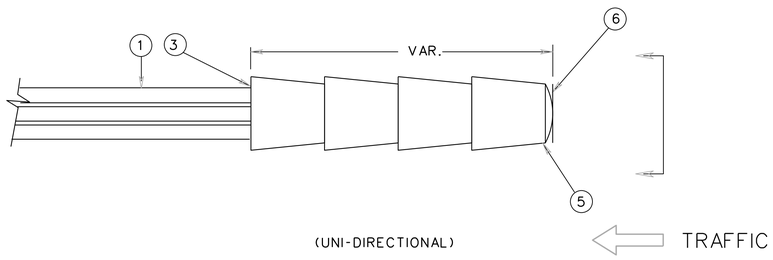

(UNI-DIRECTIONAL)

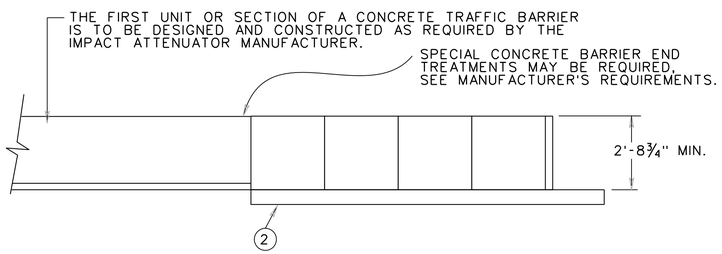

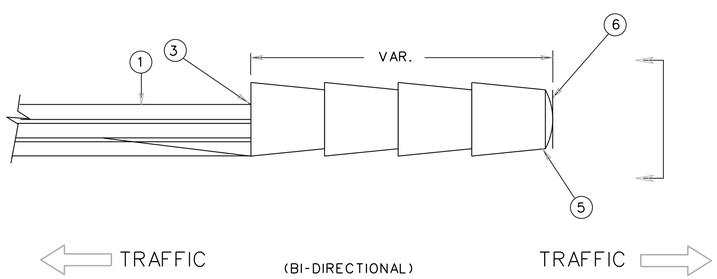

(BI-DIRECTIONAL)

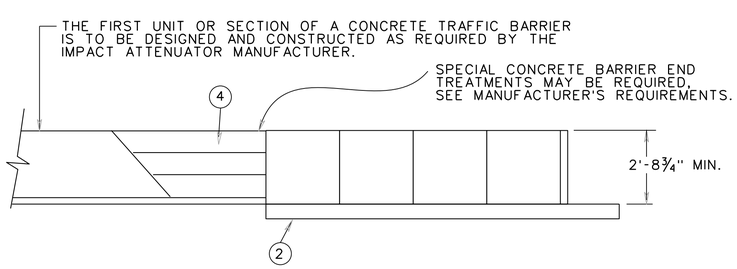

1. CONCRETE TRAFFIC BARRIER
2. PORTLAND CONCRETE OR ASPHALT FOUNDATION AS REQUIRED BY IMPACT ATTEN. MANUFACTURER.
3. CONSTRUCTION ZONE BACKUP
4. TRANSITION PANEL (4" OFFSET)
5. NOSE COVER (YELLOW)
6. MARKER

MARKER IS TO BE ATTACHED USING 20 GAUGE x 1¼" x 3'-0" GALVANIZED METAL STRAPS 4-⅜" x 1" HEX HEAD BOLTS WITH LOCK, WASHER AND NUT.

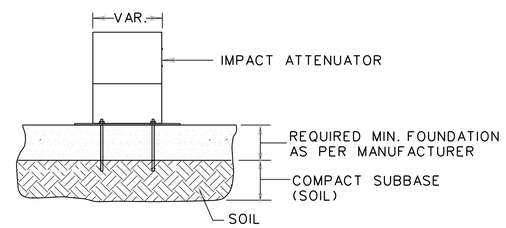

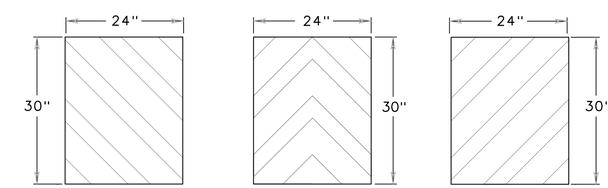

THROUGH ROADWAY MARKER POSITION LEFT OF TRAFFIC | GORE AREA MARKER | THROUGH ROADWAY MARKER POSITION RIGHT OF TRAFFIC

1. WHEN A PAY ITEM, BASIS OF PAYMENT SHALL BE IMPACT ATTENUATOR SERVICE, TYPE 1-A IN UNITS OF EACH PER LOCATION AND SHALL INCLUDE ALL SITE PREPARATION, MP-3 ANCHORS OR ANCHOR PINS, PAD, INSTALLATION, TRANSITION PANEL, REFLECTIVE MARKER(S), MAINTENANCE, AND REMOVAL WHEN NO LONGER NEEDED.

   IMPACT ATTENUATORS USED WITH BARRIER OPENINGS FOR EQUIPMENT ACCESS WILL NOT BE SUMMARIZED FOR PAYMENT. REFERENCE ROAD AND BRIDGE SPECIFICATIONS, SECTION 512.

2. PORTABLE IMPACT ATTENUATOR SHALL BE AS SHOWN BELOW OR OTHER MANUFACTURER'S EQUAL AS APPROVED BY THE ENGINEER. MUST BE FROM THE VDOT NCHRP 350 APPROVED LIST.

   THE QUADGUARD II SYSTEM AS MANUFACTURED BY ENERGY ABSORPTION SYSTEMS, INC.

   THE SHORTRACC TRINITY ATTENUATING CRASH CUSHION BY TRINITY HIGHWAY PRODUCTS.

   THE 4 BAY TAU-II SYSTEM AS MANUFACTURED BY BARRIER SYSTEMS INC.

   DESIGN SHOWN ON THIS SHEET IS FOR EXAMPLE PURPOSES ONLY AND DOES NOT PRECLUDE OTHER SYSTEM DESIGNS AS INDICATED IN THE NOTE ABOVE.

   SEE MANUFACTURER'S SPECIFICATIONS AND DRAWINGS FOR DIMENSIONS AND DETAILS NOT SHOWN.

   QUADGUARD II UNIT OPERATION REQUIRES INSTALLATION THAT ENSURES 2'-6" OF UNRESTRICTED TRAVEL BY THE LAST BAY FENDER PANELS TO THE REAR OF THEIR PRE-IMPACT POSITION.

   ALL UNITS MUST HAVE SUCCESSFULLY PASSED MASH OR THE NCHRP 350 TL-2 TESTING CRITERIA AND BEEN ACCEPTED BY FHWA.

3. ALL STEEL HARDWARE COMPONENTS MUST BE GALVANIZED.

4. IMPACT ATTENUATOR MANUFACTURERS MUST FURNISH DETAILS FOR THE REQUIRED MINIMUM PAD LAYER DEPTH OR COMBINATION DEPTHS SHOWN FOR THE DIFFERENT TYPES OF MATERIALS (P.C. CONCRETE & ASPHALT). THE MANUFACTURER MUST ALSO FURNISH THE REQUIRED ANCHORING SYSTEM. COMPACTED SUBBASE (SOIL) SHALL NOT BE USED WITHOUT MINIMUM PAD LAYER(S) OF P.C. CONCRETE OR ASPHALT MATERIAL.

   FOR DIMENSIONS OF UNIT AND CONCRETE PAD SEE MANUFACTURER'S DRAWINGS AND SPECIFICATIONS.

   FOR INSTALLATION INSTRUCTION AND RESTRICTIONS SEE MANUFACTURER'S SPECIFICATIONS.

5. FLUORESCENT PRISMATIC LENS ORANGE SHEETING SHALL BE USED ON THE REFLECTIVE MARKERS. ALL REFLECTIVE SHEETING IS TO BE IN ACCORDANCE WITH SECTION 701 OF THE ROAD AND BRIDGE SPECIFICATIONS. STRIPES SHALL SLOPE DOWN TOWARD THE SIDE OF THE OBSTRUCTION ON WHICH TRAFFIC IS TO PASS.

COLOR

FIELD - ORANGE STRIPES (REFLECTORIZED) CONSTRUCTION/MAINTENANCE ZONES.

MESSAGE - BLACK (NON-REFLECTORIZED) CONSTRUCTION/MAINTENANCE ZONES.

RE-DIRECTIVE PORTABLE IMPACT ATTENUATOR
(TEMPORARY USE ONLY)

(WHEN CALLED FOR ON PLANS AND SUMMARIZED AS IMPACT ATTENUATOR SERVICE. THIS DEVICE SHALL BE DESIGNATED TYPE 1-A RE-DIRECTIVE)

TL-2 (45 MPH MAXIMUM DESIGN SPEED)
ITEM CODE * 13605

Revised 7-2008

SPECIAL DESIGN SECTION DRAWING NO. 3356

	PROJECT	SHEET NO.
	0029-151-105	2P

Rinker Design Associates, P.C.
Civil Engineering • Surveying • Land Planning
Transportation • Environmental
Right of Way Services
Office Locations
4121 Chain Bridge Boulevard, Suite 1 Fairfax, VA 22030 Phone: (703) 385-7889
4121 Carrington Boulevard Suite 100 Glen Allen, VA 23060 Phone: (804) 747-1000
4000 Dayton Boulevard Suite 100 Chattanooga, TN 37415 Phone: (423) 875-0400
4121 Wilson Boulevard Suite 100 Arlington, VA 22203 Phone: (703) 385-7889
4121 Wilson Boulevard Suite 100 Arlington, VA 22203 Phone: (703) 368-7373

4/20/2016

PROJECT MANAGER Wendy Black Sanford, City of Fairfax (703) 385-7889
SURVEYED BY Rinker Design Assoc., P.C. (703) 368-7373 (2011)
DESIGNED BY Adam D. Weischenbach P.E., Rinker Design Assoc., P.C. (703) 368-7373
SUBSURFACE UTILITY PROVIDED BY Accumark (2011)

VDOT Insertable Sheets

REVISED	STATE	STATE ROUTE	STATE PROJECT	SHEET NO.
	VA.	-	0029-151-105 P101, P102, R201, C501	2P(1)

DESIGN FEATURES RELATING TO CONSTRUCTION OR TO REGULATION AND CONTROL OF TRAFFIC MAY BE SUBJECT TO CHANGE AS DEEMED NECESSARY BY THE DEPARTMENT

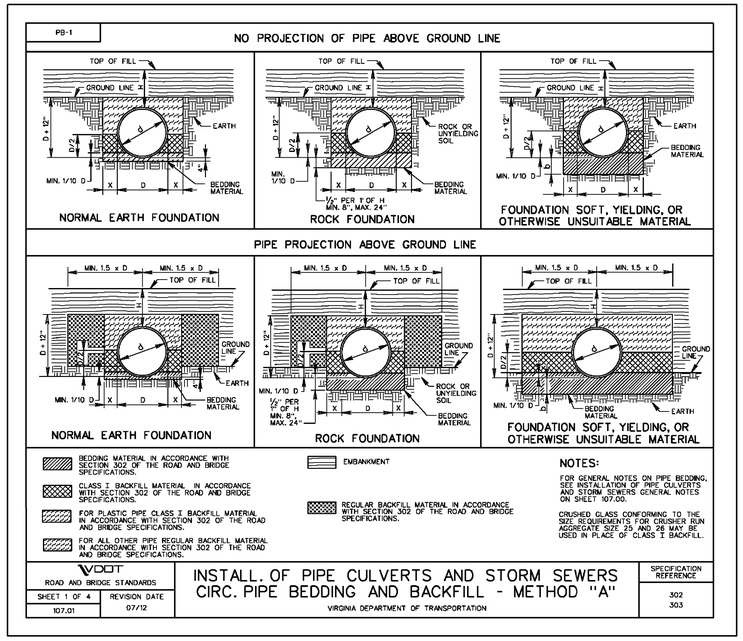

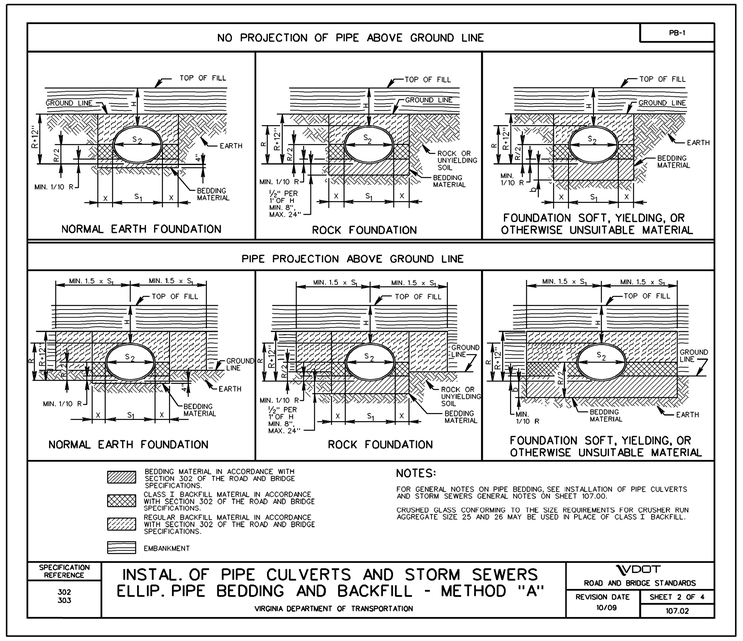

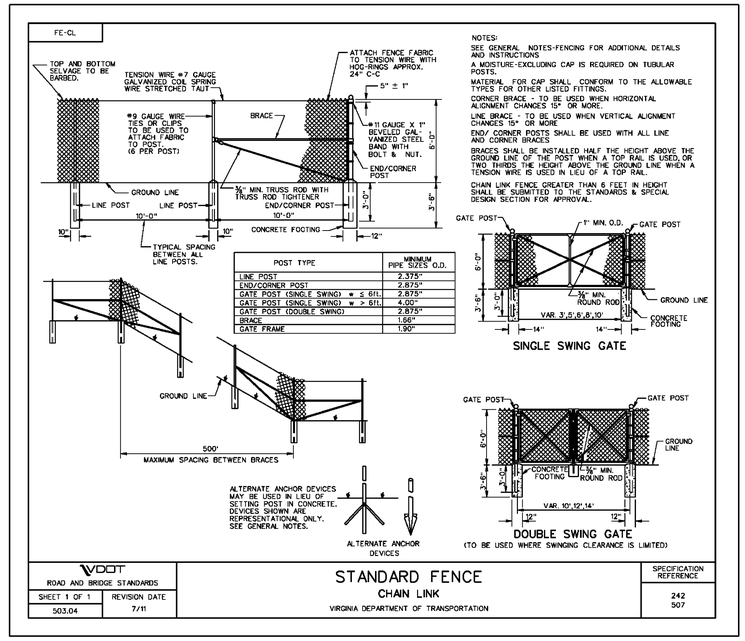

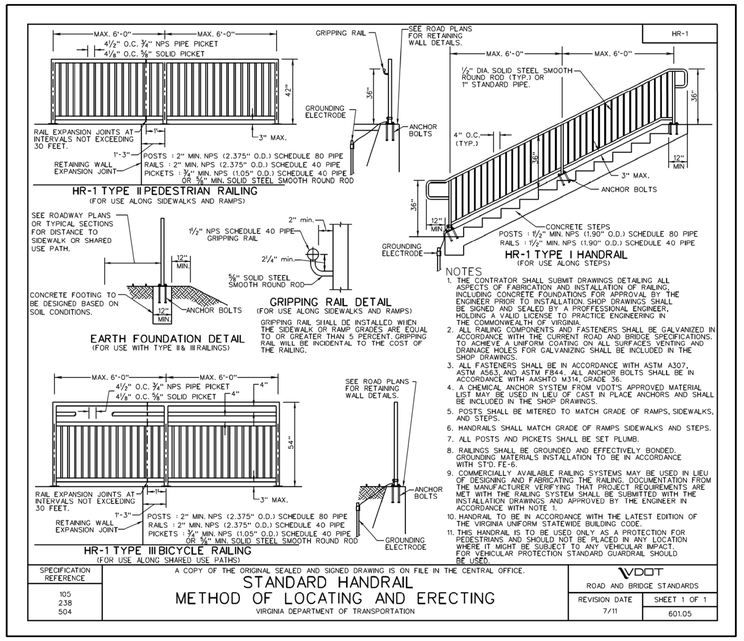

	PROJECT	SHEET NO.
	0029-151-105	2P(1)

Rinker Design Associates, P.C.
Civil Engineering - Surveying - Land Planning
Transportation - Environmental
Right of Way Services
Office Locations
Fairfax, VA 22030
Manassas, VA 20110
Fredericksburg, VA 22407
Olney, MD 20832
Phone: (703) 368-7373
Fax: (703) 273-3669
www.rinkerdesign.com

4/20/2016

PROJECT MANAGER Wendy Black Sanford, City of Fairfax (703) 385-7889
SURVEYED BY Rinker Design Assoc., P.C. (703) 368-7373 (2011)
DESIGNED BY Adam D. Weischenbach P.E., Rinker Design Assoc., P.C. (703) 368-7373
SUBSURFACE UTILITY PROVIDED BY Accumark (2011)

VDOT Insertable Sheets

REVISED	STATE	ROUTE	PROJECT	SHEET NO.
	VA.	-	0029-151-105 P101, P102, R201, C501	2P(2)

DESIGN FEATURES RELATING TO CONSTRUCTION OR TO REGULATION AND CONTROL OF TRAFFIC MAY BE SUBJECT TO CHANGE AS DEEMED NECESSARY BY THE DEPARTMENT

PC-1

DIAMETER INCHES	AREA SQ. FT.	MAXIMUM HEIGHT OF COVER IN FEET: NONREINFORCED CONCRETE (STRENGTH) (SEE NOTE 4)	REINFORCED CONCRETE CLASS III	IV	V	DIAMETER INCHES
12	0.8	14' (1800)	14'	19'	29'	12
15	1.2	14' (2125)	14'	19'	29'	15
18	1.8	14' (2400)	14'	20'	29'	18
21	2.4	13' (2700)	14'	20'	29'	21
24	3.1	13' (3000)	14'	20'	29'	24
27	4.0		14'	20'	29'	27
30	4.9		14'	20'	29'	30
33	5.9		14'	20'	29'	33
36	7.1		14'	20'	30'	36
42	9.6		14'	21'	30'	42
48	12.6		14'	21'	30'	48
54	15.9		14'	21'	30'	54
60	19.6		14'	21'	30'	60
66	23.8		14'	21'	30'	66
72	28.3		14'	21'	30'	72
78	33.2		14'	21'	30'	78
84	38.5		14'	21'	30'	84
90	44.4		14'	21'	30'	90
96	50.3		14'	21'	30'	96
102	56.7		14'	21'	30'	102
108	63.6		14'	21'	30'	108

NOTES:
1. COVER HEIGHTS INDICATED IN TABLES ARE FOR FINISHED CONSTRUCTION. THE COVER HEIGHTS WERE RETAINED TO MATCH FORMER COVER HEIGHTS BASED ON ALLOWABLE STRESS DESIGN. COVER HEIGHTS WERE NOT RE-CALCULATED USING LRFD.
2. TO PROTECT PIPE DURING CONSTRUCTION, MINIMUM HEIGHTS OF COVER PRIOR TO ALLOWING CONSTRUCTION TRAFFIC TO CROSS INSTALLATION ARE TO BE 1/2 DIAMETER OR 3'0", WHICHEVER IS GREATER. THE COVER SHALL EXTEND THE FULL LENGTH OF THE PIPE. THE APPROACH FILL RAMP IS TO EXTEND A MINIMUM OF 10(DIAMETER + 36") ON EACH SIDE OF THE PIPE, OR TO THE INTERSECTION WITH A CUT.
3. STANDARD MINIMUM FINISHED HEIGHT OF COVER FOR ALL PIPES, EXCEPT THOSE UNDER ENTRANCES, SHALL BE 2.0' OR 1/2 DIAMETER, WHICHEVER IS GREATER. IN CASES IN WHICH THESE COVER HEIGHTS CANNOT BE ACHIEVED, AN ABSOLUTE MINIMUM FINISHED COVER HEIGHT OF 1.0' WILL BE ALLOWED ONLY IF ALL POSSIBLE MEANS TO OBTAIN THE STANDARD VALUE HAVE BEEN EXHAUSTED. THE MINIMUM FINISHED HEIGHT OF COVER FOR PIPES UNDER ENTRANCES IS 9".
4. CRUSHING STRENGTH (POUNDS PER LINEAR FOOT ULTIMATE STRENGTH) PER ASTM C76:
   2000 LBS FOR CLASS III PIPE
   3000 LBS FOR CLASS IV PIPE
   3750 LBS FOR CLASS V PIPE
5. FOR HEIGHT OF COVER GREATER THAN THAT SHOWN FOR CLASS V, A SPECIAL DESIGN CONCRETE PIPE IS REQUIRED.
6. NONREINFORCED PIPE TO BE USED ONLY UNDER ENTRANCES AND LOWER FUNCTIONAL CLASSIFICATION (LFC) ROADWAYS (SEE SHEET 17 OF 18).
7. SEE STANDARD PB-1 FOR PIPE BEDDING AND BACKFILL REQUIREMENTS.
8. PIPE WITH LESS THAN THE STANDARD MINIMUM COVER IS TO BE MINIMUM CLASS III REINFORCED.

VDOT ROAD AND BRIDGE STANDARDS | SHEET 1 OF 18 | REVISION DATE 11/15 | 107.05

A COPY OF THE ORIGINAL SEALED AND SIGNED DRAWING IS ON FILE IN THE CENTRAL OFFICE.
CONCRETE PIPE
HEIGHT OF COVER TABLE FOR HL-93 LIVE LOAD
VIRGINIA DEPARTMENT OF TRANSPORTATION

SPECIFICATION REFERENCE: 302, 232

PC-1

HORIZONTAL INSTALLATION (SPAN x RISE)

EQUIVALENT ROUND SIZE INCHES	SPAN X RISE INCHES	MAX. HEIGHT OF COVER IN FEET, CLASS: HE - III	HE - IV
18	23 x 14	13'	21'
24	30 x 19	13'	21'
27	34 x 22	13'	21'
30	38 x 24	13'	21'
33	42 x 27	13'	21'
36	45 x 29	13'	21'
39	49 x 32	13'	21'
42	53 x 34	13'	21'
48	60 x 38	13'	21'
54	68 x 43	13'	21'
60	76 x 48	13'	21'
66	83 x 53	13'	21'
72	91 x 58	13'	21'
78	98 x 63	13'	21'
84	106 x 68	13'	21'

VERTICAL INSTALLATION (SPAN x RISE)

SPAN X RISE INCHES	MAX. HEIGHT OF COVER IN FEET, CLASS: VE - III	VE - IV	VE - V
29 x 45	13	21	29
32 x 49	13	21	29
34 x 53	13	21	29
38 x 60	13	21	29
43 x 68	13	21	29
48 x 76	13	21	29
53 x 83	13	21	29
58 x 91	13	21	29
63 x 98	13	21	29
68 x 106	13	21	29

NOTES:
1. COVER HEIGHTS INDICATED IN TABLES ARE FOR FINISHED CONSTRUCTION. THE COVER HEIGHTS WERE RETAINED TO MATCH FORMER COVER HEIGHTS BASED ON ALLOWABLE STRESS DESIGN. COVER HEIGHTS WERE NOT RE-CALCULATED USING LRFD.
2. TO PROTECT PIPE DURING CONSTRUCTION, MINIMUM HEIGHTS OF COVER PRIOR TO ALLOWING CONSTRUCTION TRAFFIC TO CROSS INSTALLATION ARE TO BE 1/2 SPAN OR 3', WHICHEVER IS GREATER. THE COVER SHALL EXTEND THE FULL LENGTH OF THE PIPE. THE APPROACH FILL RAMP IS TO EXTEND A MINIMUM OF 10(SPAN + 36") ON EACH SIDE OF THE PIPE OR TO THE INTERSECTION WITH A CUT.
3. STANDARD MINIMUM FINISHED HEIGHT OF COVER FOR ALL PIPES SHALL BE 2.0' OR 1/2 SPAN, WHICHEVER IS GREATER. IN CASES IN WHICH THESE COVER HEIGHTS CANNOT BE ACHIEVED, AN ABSOLUTE MINIMUM FINISHED COVER HEIGHT OF 1.0' WILL BE ALLOWED ONLY IF ALL POSSIBLE MEANS TO OBTAIN THE STANDARD VALUE HAVE BEEN EXHAUSTED. MINIMUM FINISHED HEIGHT OF COVER FOR PIPE UNDER ENTRANCES IS 9".
4. SEE STANDARD PB-1 FOR PIPE BEDDING AND BACKFILL REQUIREMENTS.

SPECIFICATION REFERENCE: 302, 232

A COPY OF THE ORIGINAL SEALED AND SIGNED DRAWING IS ON FILE IN THE CENTRAL OFFICE.
REINFORCED ELLIPTICAL CONCRETE PIPE
HEIGHT OF COVER TABLES FOR HL-93 LIVE LOAD
VIRGINIA DEPARTMENT OF TRANSPORTATION

VDOT ROAD AND BRIDGE STANDARDS | REVISION DATE 11/15 | SHEET 2 OF 18 | 107.06

PC-1

CORRUGATED STEEL PIPE 2 2/3" x 1/2" CORRUGATIONS

PIPE DIAMETER INCHES	AREA SQ. FT.	MAXIMUM HEIGHT OF COVER IN FEET, SHEET THICKNESS IN INCHES (GAUGE): 0.064 (16)	0.079 (14)	0.109 (12)	0.138 (10)	0.168 (8)	MINIMUM SHEET THICKNESS FOR ENTRANCE PIPES WITH LESS THAN 1 FT. COVER INCHES (GAUGE)
12	0.79	233	291				0.064 (16)
15	1.23	186	233				0.064 (16)
18	1.77	155	194	272			0.064 (16)
21	2.40	132	166	233			0.064 (16)
24	3.14	116	145	203			0.064 (16)
27	3.98	102	128	180			0.064 (16)
30	4.91	92	115	162			0.064 (16)
33	5.94	83	105	147	190		0.064 (16)
36	7.1	76	96	135	174		0.064 (16)
42	9.6	65	81	115	149	182	0.064 (16)
48	12.6	56	71	100	130	159	0.064 (16)
54	16.0		63	89	115	141	0.079 (14)
60	19.6			79	103	126	0.109 (12)
66	23.8				93	114	0.138 (10)
72	28.3				85	105	0.138 (10)
78	33.2					96	0.168 (8)
84	38.5					89	0.168 (8)

NOTES:
1. COVER HEIGHTS INDICATED IN TABLES ARE FOR FINISHED CONSTRUCTION, USING AASHTO LRFD BRIDGE DESIGN SPECIFICATIONS AND ASSUMING 25Y METAL LOSS AT END OF DESIGN LIFE.
2. TO PROTECT PIPE DURING CONSTRUCTION, MINIMUM HEIGHT OF COVER TO BE IN ACCORDANCE WITH TABLE A PRIOR TO ALLOWING CONSTRUCTION TRAFFIC TO CROSS INSTALLATION. THE COVER SHALL EXTEND THE FULL LENGTH OF THE PIPE. THE APPROACH FILL RAMP IS TO EXTEND A MINIMUM OF 10 DIAMETERS ON EACH SIDE OF THE PIPE OR THE INTERSECTION WITH A CUT.
3. STANDARD MINIMUM FINISHED HEIGHT OF COVER FOR ALL PIPES, EXCEPT UNDER ENTRANCES, SHALL BE 2.0' OR 1/2 DIAMETER, WHICHEVER IS GREATER. IN CASES IN WHICH THESE COVER HEIGHTS CANNOT BE ACHIEVED, AN ABSOLUTE MINIMUM FINISHED COVER HEIGHT OF 1.0' OR 1/8 DIAMETER, WHICHEVER IS GREATER, WILL BE ALLOWED ONLY IF ALL POSSIBLE MEANS TO OBTAIN THE STANDARD VALUE HAVE BEEN EXHAUSTED. THE MINIMUM FINISHED HEIGHT OF COVER FOR PIPES UNDER ENTRANCES IS 9" FOR PIPE DIAMETERS EQUAL TO OR LESS THAN 18" AND 12" OR 1/4 DIAMETER, WHICHEVER IS GREATER, FOR PIPE DIAMETERS GREATER THAN 18". WHERE A POLYMER COATED PIPE WILL BE USED AND THE SURFACE OVER THE TOP OF THE PIPE WILL BE ASPHALT, CLASS I BACKFILL MATERIAL IS TO BE PLACED UP TO A MINIMUM OF 6" ABOVE THE TOP OF THE PIPE.
4. SEE STANDARD PB-1 FOR PIPE BEDDING AND BACKFILL REQUIREMENTS.

TABLE A: PIPE DIAMETER	MINIMUM COVER HEIGHT DURING CONSTRUCTION (SEE NOTE 2)
12" TO 33"	18"
36" AND ABOVE	1/2 DIAMETER

CONCRETE- LINED CORRUGATED STEEL PIPE
MAXIMUM HEIGHT OF COVER TO BE IN ACCORDANCE WITH THE TABLES BUT SHALL NOT EXCEED 30'.

CORRUGATED STEEL PIPE 3" x 1" CORRUGATIONS

PIPE DIAMETER INCHES	AREA SQ. FT.	MAXIMUM HEIGHT OF COVER IN FEET, SHEET THICKNESS IN INCHES (GAUGE): 0.064 (16)	0.079 (14)	0.109 (12)	0.138 (10)	0.168 (8)
36	7.1	88	110	155	200	246
42	9.6	75	94	133	171	210
48	12.6	65	82	116	149	183
54	16.0	57	72	102	132	163
60	19.6	51	65	92	119	146
66	23.8	46	58	83	108	132
72	28.3	42	53	76	98	121
78	33.2	38	49	69	90	111
84	38.5	35	45	64	83	103
90	44.2	32	41	59	77	96
96	50.3		38	55	72	89
102	56.7		36	52	68	84
108	63.6			49	64	80
114	70.9			45	60	74
120	78.5			43	56	70
132	95.0				51	63
144	113.0					57

CORRUGATED STEEL PIPE 5" x 1" CORRUGATIONS

PIPE DIAMETER INCHES	AREA SQ. FT.	MAXIMUM HEIGHT OF COVER IN FEET, SHEET THICKNESS IN INCHES (GAUGE): 0.064 (16)	0.079 (14)	0.109 (12)	0.138 (10)	0.168 (8)
36	7.1	78	98	138	178	218
42	9.6	66	84	118	152	187
48	12.6	58	73	103	133	163
54	16.0	51	64	91	118	144
60	19.6	45	57	81	105	130
66	23.8	41	52	74	95	117
72	28.3	37	47	67	87	107
78	33.2	34	43	61	80	99
84	38.5	31	39	57	74	91
90	44.2	28	36	53	69	85
96	50.3		34	49	64	79
102	56.7		31	46	60	74
108	63.6			43	56	69
114	70.9			40	53	65
120	78.5			38	50	62
132	95.0				44	55
144	113.0					50

VDOT ROAD AND BRIDGE STANDARDS | SHEET 3 OF 18 | REVISION DATE 11/15 | 107.07

A COPY OF THE ORIGINAL SEALED AND SIGNED DRAWING IS ON FILE IN THE CENTRAL OFFICE.
CORRUGATED STEEL PIPE
HEIGHT OF COVER TABLES FOR HL-93 LIVE LOAD
VIRGINIA DEPARTMENT OF TRANSPORTATION

SPECIFICATION REFERENCE: 302, 232

CORRUGATED ALUMINUM ALLOY PIPE- 2 2/3" x 1/2" CORRUGATIONS

PIPE DIAMETER INCHES	AREA SQ. FT.	MAXIMUM HEIGHT OF COVER IN FEET, SHEET THICKNESS IN INCHES (GAUGE): 0.060 (16)	0.075 (14)	0.105 (12)	0.135 (10)	0.164 (8)	MINIMUM SHEET THICKNESS FOR ENTRANCE PIPES WITH LESS THAN 1 FT. COVER (GAUGE)
12	0.8	141	176	247	318	389	16
15	1.2	112	141	197	254	311	16
18	1.8	93	117	164	212	259	16
21	2.4	80	100	140	181	221	16
24	3.1	69	87	123	158	193	16
27	4.0		77	109	140	172	14
30	4.9		69	98	126	154	14
33	5.9		63	88	114	140	14
36	7.1		57	81	105	128	14
42	9.6			69	89	109	12
48	12.6			60	78	95	12
54	15.9			53	69	84	12
60	19.6				61	75	10
66	23.8					68	8
72	28.3					62	8

CORRUGATED ALUMINUM ALLOY PIPE- 3" x 1" CORRUGATIONS

PIPE DIAMETER INCHES	AREA SQ. FT.	MAXIMUM HEIGHT OF COVER IN FEET, SHEET THICKNESS IN INCHES (GAUGE): 0.060 (16)	0.075 (14)	0.105 (12)	0.135 (10)	0.164 (8)
36	7.1	52	66	93	126	148
42	9.6	44	56	80	107	127
48	12.6	38	49	69	93	110
54	16.0	34	43	61	83	98
60	19.6	30	38	54	74	87
66	23.8	26	34	49	67	79
72	28.3	24	31	45	61	72
78	33.2		28	41	56	66
84	38.5			37	51	61
90	44.2			34	47	57
96	50.3			32	44	53
102	56.7				41	49
108	63.6				38	46
114	70.9					43
120	78.5					41

NOTES:
1. COVER HEIGHTS INDICATED IN TABLES ARE FOR FINISHED CONSTRUCTION, USING AASHTO LRFD BRIDGE DESIGN SPECIFICATIONS AND ASSUMING 25Y METAL LOSS AT END OF DESIGN LIFE.
2. TO PROTECT PIPE DURING CONSTRUCTION, MINIMUM HEIGHT OF COVER TO BE IN ACCORDANCE WITH TABLE A PRIOR TO ALLOWING CONSTRUCTION TRAFFIC TO CROSS INSTALLATION. THE COVER SHALL EXTEND THE FULL LENGTH OF THE PIPE.
3. STANDARD MINIMUM FINISHED HEIGHT OF COVER FOR ALL PIPES, EXCEPT THOSE UNDER ENTRANCES, SHALL BE 2.0' OR 1/2 DIAMETER, WHICHEVER IS GREATER. IN CASES IN WHICH THESE COVER HEIGHTS CANNOT BE ACHIEVED, AN ABSOLUTE MINIMUM FINISHED COVER HEIGHT OF 1.0' OR 1/8 DIAMETER, WHICHEVER IS GREATER, WILL BE ALLOWED ONLY IF ALL POSSIBLE MEANS TO OBTAIN THE STANDARD VALUE HAVE BEEN EXHAUSTED. THE MINIMUM FINISHED HEIGHT OF COVER FOR PIPES UNDER ENTRANCES IS 9" FOR PIPE DIAMETERS EQUAL TO OR LESS THAN 18" AND 12" OR 1/4 DIAMETER, WHICHEVER IS GREATER, FOR PIPE DIAMETERS GREATER THAN 18".
4. SEE STANDARD PB-1 FOR PIPE BEDDING AND BACKFILL REQUIREMENTS.

TABLE A: PIPE DIAMETER	MINIMUM COVER HEIGHT DURING CONSTRUCTION (SEE NOTE 2)
12" TO 27"	18"
30" AND OVER	EQUAL TO DIAMETER

SPECIFICATION REFERENCE: 232, 302

A COPY OF THE ORIGINAL SEALED AND SIGNED DRAWING IS ON FILE IN THE CENTRAL OFFICE.
CORRUGATED ALUMINUM ALLOY PIPE
HEIGHT OF COVER TABLE FOR HL-93 LIVE LOAD
VIRGINIA DEPARTMENT OF TRANSPORTATION

VDOT ROAD AND BRIDGE STANDARDS | REVISION DATE 11/15 | SHEET 4 OF 18 | 107.08

PC-1

MINIMUM SHEET THICKNESS AND DESIGN DATA

PIPE ARCH DIMENSION: NOMINAL SIZE SPAN - RISE INCHES	EQUIVALENT PIPE DIAMETER INCHES	AREA SQ. FT.	Rc INCHES	MINIMUM SHEET THICKNESS REQUIRED INCHES (GAUGE)	MAXIMUM COVER HEIGHT IN FEET, MAXIMUM CORNER PRESSURE: 4000 LBS./SQ. FT. (SEE NOTE 4)	6000 LBS./SQ. FT. (SEE NOTE 6)
2 2/3" x 1/2" CORRUGATIONS						
17 x 13	15	1.1	5 1/4"	0.064 (16)	11	17
21 x 15	18	1.6	6"	0.064 (16)	9	14
24 x 18	21	2.2	7 1/4"	0.064 (16)	8	12
28 x 20	24	2.8	8"	0.064 (16)	7	10
35 x 24	30	4.4	9 1/2"	0.064 (16)	5	8
42 x 29 ●	36	6.4	10 1/2"	0.064 (16)	5	8
49 x 33 ●	42	8.7	11 1/2"	0.079 (14)	5	8
57 x 38 ●	48	11.4	13 1/2"	0.109 (12)	5	8
64 x 43 ●	54	14.3	15"	0.109 (12)	6	9
71 x 47 ●	60	17.6	16 1/2"	0.138 (10)	6	9
77 x 52 ●	66	21.3	18"	0.168 (8)	6	10
83 x 57 ●	72	25.3	20"	0.168 (8)	7	10
3" x 1" AND 5" x 1" CORRUGATIONS						
40 x 31 ●	36	6.4	9 3/4"	0.109 (12)	8	12
46 x 36 ●	42	8.7	11 1/2"	0.109 (12)	8	12
53 x 41 ●	48	11.4	13"	0.109 (12)	8	13
60 x 46 ●	54	14.3	14 3/4"	0.109 (12)	8	13
66 x 51 ●	60	17.6	16 1/2"	0.109 (12)	9	13
73 x 55 ●	66	22.0	21 1/2"	0.109 (12)	11	16
81 x 59 ●	72	26.0	23"	0.109 (12)	11	17
87 x 63	78	31.0	24 1/2"	0.109 (12)	10	16
95 x 67	84	35.0	26 1/2"	0.109 (12)	11	16
103 x 71	90	40.0	27"	0.109 (12)	10	15
112 x 75	96	46.0	29"	0.109 (12)	10	16
117 x 79	102	52.0	30 3/4"	0.109 (12)	10	15
128 x 83	108	58.0	29 1/2"	0.138 (10)	9	14
137 x 87	114	64.0	30 3/4"	0.138 (10)	8	13
142 x 91	120	71.0	32 1/2"	0.168 (8)	8	12

● INDICATES PIPE ARCHES FOR WHICH DIMENSIONS FOR EITHER CORRUGATION MAY BE USED WITHIN HEIGHT OF COVER LIMITATIONS.

NOTES:
1. COVER HEIGHTS INDICATED IN TABLES ARE FOR FINISHED CONSTRUCTION WHICH MATCH FORMER VDOT ALLOWABLE STRESS DESIGN TABLES. COVER HEIGHTS WERE NOT RE-CALCULATED USING LRFD.
2. TO PROTECT PIPE DURING CONSTRUCTION, MINIMUM HEIGHTS OF COVER TO BE IN ACCORDANCE WITH TABLE A PRIOR TO ALLOWING CONSTRUCTION TRAFFIC TO CROSS INSTALLATION. THE COVER SHALL EXTEND THE FULL LENGTH OF THE PIPE ARCH. THE APPROACH FILL RAMP IS TO EXTEND A MINIMUM OF 10(HEIGHT + 36") ON EACH SIDE OF THE PIPE, OR TO THE INTERSECTION WITH A CUT.
3. STANDARD MINIMUM FINISHED HEIGHT OF COVER FOR ALL PIPES SHALL BE 2'0" OR 1/4 SPAN, WHICHEVER IS GREATER. IN CASES IN WHICH THESE COVER HEIGHTS CANNOT BE ACHIEVED, AN ABSOLUTE MINIMUM FINISHED COVER HEIGHT OF 1.0' OR 1/8 SPAN, WHICHEVER IS GREATER, WILL BE ALLOWED ONLY IF ALL POSSIBLE MEANS TO OBTAIN THE STANDARD VALUE HAVE BEEN EXHAUSTED. WHERE POLYMER COATED PIPE WILL BE USED AND THE SURFACE OVER THE TOP OF THE PIPE WILL BE ASPHALT, CLASS I BACKFILL MATERIAL IS TO BE PLACED UP TO A MINIMUM OF 6" ABOVE THE TOP OF THE PIPE.
4. SEE STANDARD PB-1 FOR PIPE BEDDING AND BACKFILL REQUIREMENTS.
5. THE MAXIMUM HEIGHT OF COVER SHOWN IN THE TABLES IS BASED ON A SOIL MODULUS OF 700 PSI. ALL OTHER DESIGN CRITERIA ARE IN ACCORDANCE WITH THE AASHTO SPECIFICATIONS AND VDOT MODIFICATIONS FOR SOIL CORRUGATED METAL STRUCTURE INTERACTION SYSTEMS.
6. WHEN DESIGN HEIGHT OF COVER REQUIRES THE USE OF THIS CATEGORY OF PIPE FOUNDATION AND BACKFILL MUST BE APPROVED BY THE ENGINEER.
7. SPAN OF PIPE ARCHES IS MEASURED "B" INCHES ABOVE THE INVERT. SEE DIAGRAM BELOW FOR ILLUSTRATION OF "B" DIMENSION.

TABLE A: PIPE ARCH SPAN	MINIMUM COVER HEIGHT DURING CONSTRUCTION (SEE NOTE 2)
17" TO 35"	18"
42" AND ABOVE	1/2 SPAN

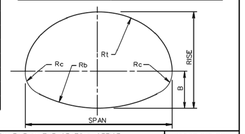

SPECIFICATION REFERENCE: 232, 302

A COPY OF THE ORIGINAL SEALED AND SIGNED DRAWING IS ON FILE IN THE CENTRAL OFFICE.
CORRUGATED STEEL PIPE ARCH
HEIGHT OF COVER TABLE FOR HL-93 LIVE LOAD
VIRGINIA DEPARTMENT OF TRANSPORTATION

VDOT ROAD AND BRIDGE STANDARDS | SHEET 5 OF 18 | REVISION DATE 11/15 | 107.09

PC-1

MINIMUM SHEET THICKNESS AND DESIGN DATA

PIPE ARCH DIMENSION: NOMINAL SIZE SPAN-RISE INCHES	EQUIVALENT PIPE DIAMETER INCHES	AREA SQ. FT.	Rc INCHES	MINIMUM SHEET THICKNESS REQUIRED INCHES (GAUGE)	MAXIMUM COVER HEIGHT IN FEET, MAXIMUM CORNER PRESSURE: 4000 LBS./SQ. FT. (SEE NOTE 4)	6000 LBS./SQ. FT. (SEE NOTE 6)
2 2/3" x 1/2" CORRUGATIONS						
17 x 13	15	1.1	3"	0.060 (16)	11	17
21 x 15	18	1.6	3"	0.060 (16)	9	14
24 x 18	21	2.2	3"	0.060 (16)	8	12
28 x 20	24	2.8	3"	0.075 (14)	7	10
35 x 24	30	4.4	3"	0.075 (14)	5	8
42 x 29 ●	36	6.4	3 1/2"	0.105 (12)	5	8
49 x 33 ●	42	8.7	4"	0.105 (12)	5	8
57 x 38 ●	48	11.4	5"	0.135 (10)	5	8
64 x 43 ●	54	14.3	6"	0.135 (10)	6	9
71 x 47 ●	60	17.6	7"	0.164 (8)	6	9
3" x 1" CORRUGATIONS						
40 x 31 ●	36	6.4	5"	0.060 (16)	8	12
46 x 36 ●	42	8.7	6"	0.060 (16)	8	12
53 x 41 ●	48	11.4	7"	0.060 (16)	8	13
60 x 46 ●	54	14.3	8"	0.075 (14)	8	13
66 x 51 ●	60	17.6	9"	0.075 (14)	9	13
73 x 55	66	22.0	12"	0.105 (12)	11	16
81 x 59	72	26.0	14"	0.105 (12)	11	17
87 x 63	78	31.0	14"	0.135 (10)	10	16
95 x 67	84	35.0	16"	0.135 (10)	11	16
103 x 71	90	40.0	16"	0.164 (8)	10	15
112 x 75	96	46.0	18"	0.164 (8)	10	13
117 x 79	102	52.0	18"	0.164 (8)	10	11

● INDICATES PIPE ARCHES FOR WHICH DIMENSIONS FOR EITHER CORRUGATION MAY BE USED WITHIN HEIGHT OF COVER LIMITATIONS.

NOTES:
1. COVER HEIGHTS INDICATED IN TABLES ARE FOR FINISHED CONSTRUCTION WHICH MATCH FORMER VDOT ALLOWABLE STRESS DESIGN TABLES. COVER HEIGHTS WERE NOT RE-CALCULATED USING LRFD.
2. TO PROTECT PIPE DURING CONSTRUCTION, MINIMUM HEIGHT OF COVER TO BE IN ACCORDANCE WITH TABLE A PRIOR TO ALLOWING CONSTRUCTION TRAFFIC TO CROSS INSTALLATION. THE COVER SHALL EXTEND THE FULL LENGTH OF THE PIPE ARCH. THE APPROACH FILL RAMP IS TO EXTEND A MINIMUM OF 10(HEIGHT + 1/2 SPAN) ON EACH SIDE OF THE STRUCTURE OR TO THE INTERSECTION WITH A CUT.
3. STANDARD MINIMUM FINISHED HEIGHT OF COVER FOR ALL PIPES SHALL BE 2'0" OR 1/4 SPAN, WHICHEVER IS GREATER. IN CASES IN WHICH THESE COVER HEIGHTS CANNOT BE ACHIEVED, AN ABSOLUTE MINIMUM FINISHED COVER HEIGHT OF 1.0' OR 1/8 SPAN, WHICHEVER IS GREATER, WILL BE ALLOWED ONLY IF ALL POSSIBLE MEANS TO OBTAIN THE STANDARD VALUE HAVE BEEN EXHAUSTED.
4. SEE STANDARD PB-1 FOR PIPE BEDDING AND BACKFILL REQUIREMENTS.
5. THE MAXIMUM HEIGHT OF COVER SHOWN IN THE TABLES IS BASED ON A SOIL MODULUS OF 700 PSI. ALL OTHER DESIGN CRITERIA ARE IN ACCORDANCE WITH THE AASHTO SPECIFICATIONS AND VDOT MODIFICATIONS FOR SOIL CORRUGATED METAL STRUCTURE INTERACTION SYSTEMS.
6. WHEN DESIGN HEIGHT OF COVER REQUIRES THE USE OF THIS CATEGORY OF PIPE BEDDING FOUNDATION AND BACKFILL MUST BE APPROVED BY THE ENGINEER.
7. LAPPED LONGITUDINAL SEAMS SHALL BE STAGGERED SO AS TO ALTERNATE ON EACH SIDE OF THE CENTER OF ARCH TOP BY APPROXIMATELY 15 PERCENT OF THE PERIPHERY.
8. A TOLERANCE OF PLUS, OR MINUS, 1" IS PERMISSIBLE FOR DIMENSIONS OF SPAN, RISE, AND CORNER RADIUS.

TABLE A: PIPE DIAMETER	MINIMUM COVER HEIGHT DURING CONSTRUCTION (SEE NOTE 2)
17" TO 35"	18"
42" AND ABOVE	1/2 SPAN

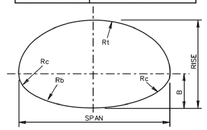

SPECIFICATION REFERENCE: 232, 302

A COPY OF THE ORIGINAL SEALED AND SIGNED DRAWING IS ON FILE IN THE CENTRAL OFFICE.
CORRUGATED ALUMINUM ALLOY PIPE ARCH
HEIGHT OF COVER TABLE FOR HL-93 LIVE LOAD
VIRGINIA DEPARTMENT OF TRANSPORTATION

VDOT ROAD AND BRIDGE STANDARDS | REVISION DATE 11/15 | SHEET 6 OF 18 | 107.10

PROJECT	SHEET NO.
0029-

PROJECT MANAGER Wendy Black Sanford, City of Fairfax (703) 385-7889
SURVEYED BY Rinker Design Assoc., P.C. (703) 368-7373 (2011)
DESIGNED BY Adam D. Weischenbach P.E., Rinker Design Assoc., P.C. (703) 368-7373
SUBSURFACE UTILITY PROVIDED BY Accumark (2011)

VDOT Insertable Sheets

REVISED	STATE	STATE ROUTE	STATE PROJECT	SHEET NO.
	VA.	-	0029-151-105 P101, P102, R201, C501	2P(3)

DESIGN FEATURES RELATING TO CONSTRUCTION OR TO REGULATION AND CONTROL OF TRAFFIC MAY BE SUBJECT TO CHANGE AS DEEMED NECESSARY BY THE DEPARTMENT

PC-1

STRUCTURAL PLATE STEEL PIPE- 6" x 2" CORRUGATIONS

PIPE DIAMETER	AREA	MINIMUM HEIGHT OF COVER IN FEET						
		SHEET THICKNESS IN INCHES (GAUGE)						
INCHES	SQ. FT.	0.11 (12)	0.14 (10)	0.17 (8)	0.188 (7)	0.218 (5)	0.249 (3)	0.280 (1)
60	20	91	118	145	163	191	218	246
66	24	83	107	132	148	173	198	224
72	28	75	98	120	135	158	181	205
78	33	69	90	111	124	146	167	188
84	38	64	83	103	115	135	154	175
90	44	59	77	95	107	126	144	163
96	50	55	72	89	100	117	134	152
102	57	51	67	83	94	110	126	143
108	64	48	63	78	88	104	119	134
114	71	45	60	74	83	98	112	127
120	78	43	56	70	79	92	106	120
132	95	38	50	63	71	83	96	109
144	113	34	45	57	64	76	87	99
156	133	31	41	52	58	69	80	91
168	154	28	38	47	54	63	73	83
180	177	25	34	43	49	59	68	77
192	201		31	40	45	54	63	72
204	227		29	37	42	50	58	67
216	254			34	39	47	54	62
228	284			31	36	44	51	58
240	314				34	41	48	55

NOTES:

1. COVER HEIGHTS INDICATED IN TABLE ARE FOR FINISHED CONSTRUCTION, USING AASHTO LRFD BRIDGE DESIGN SPECIFICATIONS AND ASSUMING 25% METAL LOSS AT END OF DESIGN LIFE.
2. TO PROTECT PIPE DURING CONSTRUCTION MINIMUM HEIGHT OF COVER PRIOR TO ALLOWING CONSTRUCTION TRAFFIC TO CROSS INSTALLATION IS TO BE 1/2 DIAMETER. THIS COVER SHALL EXTEND THE FULL LENGTH OF THE PIPE. THE APPROACH FILL RAMP IS TO EXTEND A MINIMUM OF 10(DIAMETER + 36") ON EACH SIDE OF THE PIPE OR TO THE INTERSECTION WITH A CUT.
3. STANDARD MINIMUM FINISHED HEIGHT OF COVER FOR ALL PIPES SHALL BE 2.0' OR 1/2 DIAMETER, WHICHEVER IS GREATER. IN CASES IN WHICH THESE COVER HEIGHTS CANNOT BE ACHIEVED, AN ABSOLUTE MINIMUM FINISHED COVER HEIGHT OF 1.0' OR 1/8 DIAMETER WILL BE ALLOWED ONLY IF ALL POSSIBLE MEANS TO OBTAIN THE STANDARD VALUE HAVE BEEN EXHAUSTED.
4. STRUCTURAL PLATE PIPE DIMENSIONS ARE TO INSIDE CREST AND ARE SUBJECT TO MANUFACTURING TOLERANCES.
5. SEE STANDARD PB-1 FOR BEDDING AND BACKFILL REQUIREMENTS.

VDOT ROAD AND BRIDGE STANDARDS | SHEET 7 OF 18 | 107.11 | REVISION DATE 11/15

A COPY OF THE ORIGINAL SEALED AND SIGNED DRAWING IS ON FILE IN THE CENTRAL OFFICE.
STRUCTURAL PLATE STEEL PIPE
HEIGHT OF COVER TABLE FOR HL-93 LIVE LOAD
VIRGINIA DEPARTMENT OF TRANSPORTATION

SPECIFICATION REFERENCE 232 302

PC-1

STRUCTURAL PLATE ALUMINUM ALLOY PIPE 9" x 2½" CORRUGATIONS

PIPE DIAMETER	AREA	MAXIMUM HEIGHT OF COVER IN FEET						
		SHEET THICKNESS IN INCHES						
INCHES	SQ. FT.	0.10	0.125	0.15	0.175	0.20	0.225	0.25
60	20	59	74	90	105	120	136	151
66	24	53	67	81	95	109	123	137
72	28	48	61	74	87	100	112	125
78	33	44	56	68	80	92	103	115
84	38	41	52	63	74	85	96	107
90	44	38	48	58	68	79	89	99
96	50	35	44	54	64	73	83	93
102	57	32	41	50	60	69	78	88
108	64	30	39	47	56	64	73	82
114	71	28	36	44	53	61	69	77
120	78	26	34	42	49	57	65	73
132	95	23	30	37	44	51	58	65
144	113	20	27	33	40	46	53	59
156	133		24	30	36	42	48	54
168	154			27	33	38	44	49
180	177				30	35	40	45
192	201					32	37	42
204	227					29	34	39
216	254						31	36
228	284							33

NOTES:

1. COVER HEIGHTS INDICATED IN TABLE ARE FOR FINISHED CONSTRUCTION, USING AASHTO LRFD BRIDGE DESIGN SPECIFICATIONS AND ASSUMING 25% METAL LOSS AT END OF DESIGN LIFE.
2. TO PROTECT PIPE DURING CONSTRUCTION, MINIMUM HEIGHT OF COVER PRIOR TO ALLOWING CONSTRUCTION TRAFFIC TO CROSS INSTALLATION SHALL BE 1/2 DIAMETER. THIS COVER SHALL EXTEND THE FULL LENGTH OF THE PIPE. THE APPROACH FILL RAMP IS TO EXTEND A MINIMUM OF 10(DIAMETER + 36") ON EACH SIDE OF THE PIPE OR TO THE INTERSECTION WITH A CUT.
3. STANDARD MINIMUM FINISHED HEIGHT OF COVER FOR ALL PIPES SHALL BE 2.0' OR 1/2 DIAMETER, WHICHEVER IS GREATER. IN CASES IN WHICH THESE COVER HEIGHTS CANNOT BE ACHIEVED, AND ABSOLUTE MINIMUM FINISHED COVER HEIGHT OF 1.0' OR 1/8 DIAMETER, WHICHEVER IS GREATER, WILL BE ALLOWED ONLY IF ALL POSSIBLE MEANS TO OBTAIN THE STANDARD VALUE HAVE BEEN EXHAUSTED.
4. SEE STANDARD PB-1 FOR PIPE BEDDING AND BACKFILL REQUIREMENTS.
5. STEEL BOLTS ONLY TO BE USED. BOLTS ARE 3/4" DIAMETER HIGH STRENGTH TO MEET CURRENT AASHTO DESIGNATION M-164 AND GALVANIZED TO MEET CURRENT ASTM DESIGNATION A-394. BOLTS ARE TO BE LOCATED IN THE VALLEY AND CREST OF EACH CORRUGATION IN DOUBLE ROWS SPACED 1 3/4" APART.

SPECIFICATION REFERENCE 232 302

A COPY OF THE ORIGINAL SEALED AND SIGNED DRAWING IS ON FILE IN THE CENTRAL OFFICE.
STRUCTURAL PLATE ALUMINUM ALLOY PIPE
HEIGHT OF COVER TABLE FOR HL-93 LIVE LOAD
VIRGINIA DEPARTMENT OF TRANSPORTATION

VDOT ROAD AND BRIDGE STANDARDS | REVISION DATE 11/15 | SHEET 8 OF 18 | 107.12

PC-1

MINIMUM THICKNESS-STRUCTURAL PLATE STEEL PIPE ARCHES 6" x 2" CORRUGATIONS

PIPE ARCH DIMENSION		AREA	Rc	MINIMUM SHEET THICKNESS REQUIRED	MAXIMUM ALLOWABLE COVER HEIGHT IN FEET	
NOMINAL SIZE					MAXIMUM CORNER PRESSURE	
SPAN	RISE	SQ. FT.	INCHES	GAUGE	4000 LBS./SQ.FT. (SEE NOTE 4)	6000 LBS./SQ.FT. (SEE NOTE 6)
6'-1"	4'-7"	22	18	12	16	24
6'-4"	4'-9"	24	18	12	15	23
6'-9"	4'-11"	26	18	12	14	22
7'-0"	5'-1"	28	18	12	14	21
7'-3"	5'-3'	31	18	12	13	20
7'-8"	5'-5"	33	18	12	12	19
7'-11"	5'-7"	35	18	12	12	18
8'-2"	5'-9"	38	18	12	12	18
8'-7"	5'-11"	40	18	12	11	17
8'-10"	6'-1"	43	18	12	11	16
9'-4"	6'-3"	46	18	12	10	16
9'-6"	6'-5"	49	18	12	10	15
9'-9"	6'-7"	52	18	12	10	15
10'-3"	6'-9"	55	18	12	9	14
10'-8"	6'-11"	58	18	12	9	14
10'-11"	7'-1"	61	18	12	9	13
11'-5"	7'-3"	64	18	12	8	13
11-7"	7'-5"	67	18	12	8	12
11'-10"	7'-7"	71	18	12	8	12
12'-4"	7'-9"	74	18	12	8	12
12'-6"	7'-11"	78	18	12	8	12
12'-8"	8'-1"	81	18	12	7	11
12'-10"	8'-4"	85	18	12	7	11
13'-5"	8'-5"	89	18	12	7	11
13-11"	8'-7"	93	18	12	7	10
14'-1"	8'-9"	97	18	12	7	10
14'-3"	8'-11"	101	18	12	6	10
14'-10"	9'-1"	105	18	12	6	10
15'-4"	9'-3"	109	18	12	6	9
15'-6"	9'-5"	113	18	12	6	9
15'-8"	9'-7"	118	18	12	6	9
15'-10"	9'-10"	122	18	12	6	9
16'-5"	9'-11"	126	18	12	6	9
16'-7"	10'-1"	131	18	12	6	9

NOTES:

1. COVER HEIGHTS INDICATED IN TABLES ARE FOR FINISHED CONSTRUCTION WHICH MATCH FORMER VDOT ALLOWABLE STRESS DESIGN TABLES. COVER HEIGHTS WERE NOT RE-CALCULATED USING LRFD.
2. TO PROTECT PIPE DURING CONSTRUCTION, MINIMUM HEIGHT OF COVER PRIOR TO ALLOWING CONSTRUCTION TRAFFIC TO CROSS INSTALLATION SHALL BE 1/2 SPAN. THE COVER SHALL EXTEND THE FULL LENGTH OF THE PIPE ARCH. THE APPROACH FILL RAMP IS TO EXTEND A MINIMUM OF 10(RISE + 1/2 SPAN) ON EACH SIDE OF THE STRUCTURE, OR TO THE INTERSECTION WITH A CUT.
3. STANDARD MINIMUM FINISHED HEIGHT OF COVER FOR ALL PIPES SHALL BE 2.0' OR 1/2 SPAN, WHICHEVER IS GREATER. IN CASES IN WHICH THESE COVER HEIGHTS CANNOT BE ACHIEVED, AN ABSOLUTE MINIMUM FINISHED COVER HEIGHT OF 1.0' OR 1/8 SPAN, WHICHEVER IS GREATER, WILL BE ALLOWED ONLY IF ALL POSSIBLE MEANS TO OBTAIN THE STANDARD VALUE HAVE BEEN EXHAUSTED.
4. SEE STANDARD PB-1 FOR PIPE BEDDING AND BACKFILL REQUIREMENTS.
5. THE MAXIMUM HEIGHT OF COVER SHOWN IN THE TABLES IS BASED ON A SOIL MODULUS OF 700 PSI. ALL OTHER DESIGN CRITERIA ARE IN ACCORDANCE WITH THE AASHTO SPECIFICATIONS AND VDOT MODIFICATIONS FOR SOIL CORRUGATED METAL STRUCTURE INTERACTION SYSTEMS.
6. WHEN DESIGN HEIGHT OF COVER REQUIRES THE USE OF THIS CATEGORY OF PIPE, BEDDING AND BACKFILL MUST BE APPROVED BY THE ENGINEER.
7. STRUCTURAL PLATE PIPE-ARCH DIMENSIONS ARE TO INSIDE OF CREST AND ARE SUBJECT TO MANUFACTURING TOLERANCES.

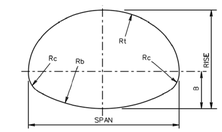

VDOT ROAD AND BRIDGE STANDARDS | SHEET 9 OF 18 | 107.13 | REVISION DATE 11/15

A COPY OF THE ORIGINAL SEALED AND SIGNED DRAWING IS ON FILE IN THE CENTRAL OFFICE.
STRUCTURAL PLATE STEEL PIPE ARCH
HEIGHT OF COVER TABLE FOR HL-93 LIVE LOAD
VIRGINIA DEPARTMENT OF TRANSPORTATION

SPECIFICATION REFERENCE 232 302

PC-1

MINIMUM THICKNESS-STRUCTURAL PLATE STEEL PIPE ARCHES 6" x 2" CORRUGATIONS

PIPE ARCH DIMENSION		AREA	Rc	MINIMUM SHEET THICKNESS REQUIRED	MAXIMUM ALLOWABLE COVER HEIGHT IN FEET
SPAN	RISE	SQ. FT.	INCHES	GAUGE	MAXIMUM CORNER PRESSURE 4000 LBS./SQ.FT. (SEE NOTE 4) / 6000 LBS./SQ.FT. (SEE NOTE 6)
13'-3'	9'-4"	97	31	12	18 ●
13'-6'	9'-6"	102	31	12	17 ●
14'-0"	9'-8"	105	31	12	17 ●
14'-2"	9'-10"	109	31	12	16 ●
14'-5"	10'-0"	114	31	12	16 ●
14'-11"	10'-2"	118	31	12	16 ●
15'-4"	10'-4"	123	31	12	15 ●
15'-7"	10'-6"	127	31	12	15 ●
15'-10"	10'-8"	132	31	12	14 ●
16'-3"	10'-10"	137	31	12	14 ●
16'-6"	11'-0"	142	31	12	14 ●
17'-0"	11'-2"	146	31	12	14 ●
17'-2"	11'-4"	151	31	12	13 ●
17'-5"	11'-6"	157	31	12	13 ●
17'-11"	11'-8"	161	31	12	13 ●
18'-1"	11'-10"	167	31	12	13 ●
18'-7"	12'-0"	172	31	12	12 ●
18'-9"	12'-2"	177	31	12	12 ●
19'-3"	12'-4"	182	31	10	8 13
19'-6"	12'-6"	188	31	10	8 13
19'-8"	12'-8"	194	31	10	8 13
19'-11"	12'-10"	200	31	10	8 12
20'-5"	13'-0"	205	31	10	8 12
20'-7"	13'-2"	211	31	10	8 12

● MAXIMUM COVER HEIGHTS SHOWN MAY BE INCREASED BY A MAXIMUM OF 12" IF A SHEET THICKNESS GREATER THAN 12 GAUGE IS USED.

NOTES:

1. COVER HEIGHTS INDICATED IN TABLES ARE FOR FINISHED CONSTRUCTION WHICH MATCH FORMER VDOT ALLOWABLE STRESS DESIGN TABLES. COVER HEIGHTS WERE NOT RE-CALCULATED USING LRFD.
2. TO PROTECT PIPE DURING CONSTRUCTION, MINIMUM HEIGHT OF COVER PRIOR TO ALLOWING CONSTRUCTION TRAFFIC TO CROSS INSTALLATION SHALL BE 1/2 SPAN. THE COVER SHALL EXTEND THE FULL LENGTH OF THE PIPE ARCH. THE APPROACH FILL RAMP IS TO EXTEND A MINIMUM OF 10(RISE + 1/2 SPAN) ON EACH SIDE OF THE STRUCTURE, OR TO THE INTERSECTION WITH A CUT.
3. STANDARD MINIMUM FINISHED HEIGHT OF COVER FOR ALL PIPES SHALL BE 1/4 SPAN IN CASES IN WHICH THIS COVER HEIGHT CANNOT BE ACHIEVED, AN ABSOLUTE MINIMUM FINISHED COVER HEIGHT OF 1/8 SPAN WILL BE ALLOWED ONLY IF ALL POSSIBLE MEANS TO OBTAIN THE STANDARD VALUE HAVE BEEN EXHAUSTED.
4. SEE STANDARD PB-1 FOR PIPE BEDDING AND BACKFILL REQUIREMENTS.
5. STRUCTURAL PLATE PIPE-ARCH DIMENSIONS ARE TO INSIDE OF CREST AND ARE SUBJECT TO MANUFACTURING TOLERANCES.
6. WHEN DESIGN HEIGHT OF COVER REQUIRES THE USE OF THIS CATEGORY OF PIPE, BEDDING AND BACKFILL MUST BE APPROVED BY THE ENGINEER.
7. THE MAXIMUM HEIGHT OF COVER SHOWN IN THE TABLES IS BASED ON A SOIL MODULUS OF 700 PSI. ALL OTHER DESIGN CRITERIA ARE IN ACCORDANCE WITH THE AASHTO SPECIFICATIONS AND VDOT MODIFICATIONS FOR SOIL CORRUGATED METAL STRUCTURE INTERACTION SYSTEMS.

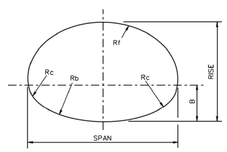

SPECIFICATION REFERENCE 232 302

A COPY OF THE ORIGINAL SEALED AND SIGNED DRAWING IS ON FILE IN THE CENTRAL OFFICE.
STRUCTURAL PLATE STEEL PIPE ARCH
HEIGHT OF COVER TABLE FOR HL-93 LIVE LOAD
VIRGINIA DEPARTMENT OF TRANSPORTATION

VDOT ROAD AND BRIDGE STANDARDS | REVISION DATE 11/15 | SHEET 10 OF 5 | 107.14

PC-1

STRUCTURAL PLATE ALUMINUM ALLOY PIPE ARCHES 9' x 2½" CORRUGATIONS

SPAN	RISE	CORNER RADIUS	MAXIMUM COVER HEIGHT IN FEET							AREA SQ.FT.
			MINIMUM SHEET THICKNESS IN INCHES							
			MAXIMUM CORNER PRESSURE IN LBS./SQ.FT.							
			0.100"	0.125"		0.150"		0.175"		
			4000 (SEE NOTE 4)	4000 (SEE NOTE 4)	6000 (SEE NOTE 6)	4000 (SEE NOTE 4)	6000 (SEE NOTE 6)	4000 (SEE NOTE 6)	6000 (SEE NOTE 6)	
6'-2"	5'-0"	31.8	25	28	36	28	42	28	42	24.7
6'-7'	4'-11'	31.8	23	26	34	26	40	26	40	26.6
6'-7"	5'-8"	31.8	23	26	34	26	40	26	40	29.6
6'-11"	5'-9"	31.8	22	25	32	25	38	25	38	31.9
7'-3"	5'-11"	31.8	21	24	31	24	36	24	36	34.3
7'-9"	6'-0"	31.8	20	22	29	22	34	22	34	36.8
8'-1"	6'-1"	31.8	19	21	28	21	32	21	32	39.3
8'-5"	6'-3"	31.8	18	20	27	20	31	20	31	41.9
8'-10"	6'-4"	31.8	17	20	25	20	30	20	30	44.5
9'-3"	6'-5"	31.8	16	19	24	19	28	19	28	45.1
9'-7"	6'-6"	31.8	16	18	23	18	27	18	27	49.9
9'-11"	6'-8"	31.8	15	17	22	17	26	17	26	52.7
10'-3"	6'-9"	31.8	15	17	22	17	25	17	25	55.5
10'-9"	6'-10"	31.8	14	16	21	16	24	16	24	58.4
11'-1"	7'-0"	31.8	14	15	20	15	23	15	23	61.4
11'-5"	7'-1"	31.8	13	15	19	15	23	15	23	64.4
11'-9"	7'-2"	31.8	13	15	19	15	22	15	22	67.5
12'-3"	7'-3"	31.8	12	14	18	14	21	14	21	70.5
12'-7"	7'-5"	31.8	12	14	18	14	21	14	21	73.7
12'-11"	7'-6"	31.8	12	13	17	13	20	13	20	77.0
13'-1"	8'-2"	31.8	11	13	17	13	20	13	20	83.0
13'-1"	8'-4"	31.8	11	13	17	13	20	13	20	86.8
13'-11"	8'-5"	31.8	11	12	16	12	19	12	19	90.3
14'-0"	8'-7"	31.8	11	12	16	12	18	12	18	94.2
13'-11"	9'-5"	31.8	11	12	16	12	19	12	19	101.5
14'-3"	9'-7"	31.8	10	12	15	12	18	12	18	105.7
14'-8"	9'-8"	31.8		12	14	12	17	12	18	109.9
14'-11"	9'-10"	31.8		11	13	11	16	11	17	114.2
15'-4"	10'-0"	31.8		11	12	11	14	11	17	118.6
15'-7"	10'-2"	31.8		11	11	11	14	11	16	123.1
16'-1"	10'-4"	31.8		10		10	12	10	15	127.6
16'-4"	10'-6"	31.8				10	12	10	14	132.3
16'-9"	10'-8"	31.8				10	11	10	13	136.9
17'-0"	10'-10"	31.8				10		10	12	141.8
17'-3"	11'-0"	31.8				10		10	12	
18'-0"	11'-4"	31.8						9	10	

NOTES:

1. COVER HEIGHTS INDICATED IN TABLES ARE FOR FINISHED CONSTRUCTION WHICH MATCH FORMER VDOT ALLOWABLE STRESS DESIGN TABLES. COVER HEIGHTS CANNOT BE ACHIEVED, AN ABSOLUTE MINIMUM FINISHED COVER HEIGHT OF 1.0' OR 1/4 DIAMETER, WHICHEVER IS GREATER, WILL BE ALLOWED ONLY IF ALL POSSIBLE MEANS TO OBTAIN THE STANDARD VALUE HAVE BEEN EXHAUSTED.
2. TO PROTECT PIPE DURING CONSTRUCTION, MINIMUM HEIGHT OF COVER PRIOR TO ALLOWING CONSTRUCTION TRAFFIC TO CROSS INSTALLATION IS TO BE 1/2 SPAN. THE COVER SHALL EXTEND THE FULL LENGTH OF THE PIPE ARCH. THE APPROACH FILL RAMP IS TO EXTEND A MINIMUM OF 10(RISE + 1/2 SPAN) ON EACH SIDE OF THE PIPE, OR TO THE INTERSECTION WITH A CUT.
3. STANDARD MINIMUM FINISHED HEIGHT OF COVER FOR ALL PIPES SHALL BE 2.0' OR 1/2 SPAN, WHICHEVER IS GREATER. IN CASES IN WHICH THESE COVER HEIGHTS CANNOT BE ACHIEVED, AN ABSOLUTE MINIMUM FINISHED COVER HEIGHT OF 1.0' OR 1/4 SPAN, WHICHEVER IS GREATER, WILL BE ALLOWED ONLY IF ALL POSSIBLE MEANS TO OBTAIN THE STANDARD VALUE HAVE BEEN EXHAUSTED.
4. SEE STANDARD PB-1 FOR BEDDING AND BACKFILL REQUIREMENTS.
5. THE MAXIMUM HEIGHT OF COVER SHOWN IN THE TABLES IS BASED ON A SOIL MODULUS OF 700 PSI. ALL OTHER DESIGN CRITERIA ARE IN ACCORDANCE WITH THE AASHTO SPECIFICATIONS AND VDOT MODIFICATIONS FOR SOIL CORRUGATED METAL STRUCTURE INTERACTION SYSTEMS.
6. WHEN DESIGN HEIGHT OF COVER REQUIRES THE USE OF THIS CATEGORY OF PIPE, BEDDING AND BACKFILL MUST BE APPROVED BY THE ENGINEER.
7. BOLTS ARE 3/4" DIAMETER, HIGH STRENGTH TO MEET CURRENT A.S.T.M. DESIGNATION M-164 AND GALVANIZED TO MEET CURRENT A.S.T.M. DESIGNATION A-394. BOLTS ARE TO BE LOCATED IN THE VALLEY AND CREST OF EACH CORRUGATION IN DOUBLE ROWS SPACED 1 3/4" APART.
8. STRUCTURAL PLATE PIPE-ARCH DIMENSIONS ARE TO INSIDE CREST AND ARE SUBJECT TO MANUFACTURING TOLERANCES.

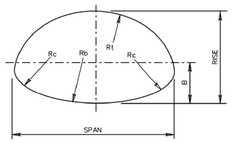

VDOT ROAD AND BRIDGE STANDARDS | SHEET 11 OF 18 | 107.15 | REVISION DATE 11/15

A COPY OF THE ORIGINAL SEALED AND SIGNED DRAWING IS ON FILE IN THE CENTRAL OFFICE.
STRUCTURAL PLATE ALUMINUM ALLOY PIPE ARCH
HEIGHT OF COVER TABLE FOR HL-93 LIVE LOAD
VIRGINIA DEPARTMENT OF TRANSPORTATION

SPECIFICATION REFERENCE 232 302

PC-1

ALUMINUM SPIRAL RIB PIPE ¾" WIDE x ¾" DEEP RIBS SPACED @ 7½"

PIPE DIAMETER INCHES	AREA SQ. FT.	MAXIMUM HEIGHT OF COVER IN FEET				MINIMUM SHEET THICKNESS FOR ENTRANCE PIPES WITH LESS THAN 1 FT. COVER INCHES (GUAGE)
		SHEET THICKNESS IN INCHES (GAUGE)				
		0.06 (16)	0.075 (14)	0.105 (12)	0.135 (10)	
12	0.8	75	103	166		0.064 (16)
15	1.2	59	82	133	188	0.075 (14)
18	1.8	49	68	110	156	0.075 (14)
21	2.4	42	58	94	134	0.105 (12)
24	3.1	36	50	82	117	0.105 (12)
27	4.0	32	44	73	103	0.105 (12)
30	4.9	28	40	65	93	0.105 (12)
36	7.1	23	33	54	77	0.105 (12)
42	9.6	19	27	46	65	0.105 (12)
48	12.6	16	23	39	57	0.105 (12)
54	16.0	13	20	35	50	0.105 (12)
60	19.6	11	17	31	45	0.105 (12)
66	23.8	9	15	27	40	0.105 (12)
72	28.3	7	13	25	36	0.105 (12)

NOTES:

1. COVER HEIGHTS INDICATED IN TABLE ARE FOR FINISHED CONSTRUCTION, USING AASHTO LRFD BRIDGE DESIGN SPECIFICATIONS AND ASSUMING 25% METAL LOSS AT END OF DESIGN LIFE.
2. TO PROTECT PIPE DURING CONSTRUCTION, MINIMUM HEIGHT OF COVER TO BE IN ACCORDANCE WITH TABLE A PRIOR TO ALLOWING CONSTRUCTION TRAFFIC TO CROSS INSTALLATION. THE COVER SHALL EXTEND THE FULL LENGTH OF THE PIPE. THE APPROACH FILL RAMP IS TO EXTEND A MINIMUM OF 20 DIAMETERS ON EACH SIDE OF THE PIPE, OR TO THE INTERSECTION WITH A CUT.
3. STANDARD MINIMUM FINISHED HEIGHT OF COVER FOR ALL PIPES, EXCEPT THOSE UNDER ENTRANCES, SHALL BE 2'0" OR 1/2 DIAMETER, WHICHEVER IS GREATER. IN CASES IN WHICH THESE COVER HEIGHTS CANNOT BE ACHIEVED, AN ABSOLUTE MINIMUM FINISHED COVER HEIGHT OF 1.0' OR 1/4 DIAMETER, WHICHEVER IS GREATER, WILL BE ALLOWED ONLY IF ALL POSSIBLE MEANS TO OBTAIN THE STANDARD VALUE HAVE BEEN EXHAUSTED. THE MINIMUM FINISHED HEIGHT OF COVER FOR PIPES UNDER ENTRANCES IS 9" FOR PIPE DIAMETERS LESS THAN OR EQUAL TO 18" AND 12" OR 1/4 DIAMETER, WHICHEVER IS GREATER, FOR PIPE DIAMETERS GREATER THAN 18".
4. SEE STANDARD PB-1 FOR PIPE BEDDING AND BACKFILL REQUIREMENTS.

TABLE A	
PIPE DIAMETER	MINIMUM COVER HEIGHT DURING CONSTRUCTION (SEE NOTE 2)
12" TO 27"	18"
30" AND OVER	EQUAL TO DIAMETER

SPECIFICATION REFERENCE 232 302

A COPY OF THE ORIGINAL SEALED AND SIGNED DRAWING IS ON FILE IN THE CENTRAL OFFICE.
ALUMINUM SPIRAL RIB PIPE
HEIGHT OF COVER TABLE FOR HL-93 LIVE LOAD
VIRGINIA DEPARTMENT OF TRANSPORTATION

VDOT ROAD AND BRIDGE STANDARDS | REVISION DATE 11/15 | SHEET 12 OF 18 | 107.16

PROJECT	SHEET NO.
0029-151-105	2P(3)

Rinker Design Associates, P.C.
Civil Engineering • Surveying • Land Planning
Transportation • Environmental
Right of Way Services
Office Locations
Fairfax, VA 22030 Phone: (703) 368-7373
Manassas, VA 20110 Phone: (703) 368-7373
Fax: (703) 273-1443
Gainesville, VA 20155 Phone: (703) 368-7373
Fax: (703) 273-1443
Fredericksburg, VA 22407 Phone: (540) 373-4654
Fax: (540) 373-4671
www.RinkerDesign.com

4/20/2016

PROJECT MANAGER Wendy Black Sanford, City of Fairfax (703) 385-7889
SURVEYED BY Rinker Design Assoc., P.C. (703) 368-7373 (2011)
DESIGN BY Adam D. Weischenbach P.E., Rinker Design Assoc., P.C. (703) 368-7373
SUBSURFACE UTILITY PROVIDED BY Accumark (2011)

VDOT Insertable Sheets

REVISED	STATE	STATE ROUTE	STATE PROJECT	SHEET NO.
	VA.	-	0029-151-105 P101, P102, R201, C501	2P(4)

DESIGN FEATURES RELATING TO CONSTRUCTION OR TO REGULATION AND CONTROL OF TRAFFIC MAY BE SUBJECT TO CHANGE AS DEEMED NECESSARY BY THE DEPARTMENT

PC-1

STEEL SPIRAL RIB PIPE 3/4" WIDE x 3/4" RIBS SPACED @ 7 1/2"

PIPE DIAMETER INCHES	AREA SQ. FT.	MAXIMUM HEIGHT OF COVER IN FEET — SHEET THICKNESS IN INCHES (GAUGE) 0.064 (16)	0.079 (14)	0.109 (12)	0.138 (10)	MINIMUM SHEET THICKNESS FOR ENTRANCE PIPES WITH LESS THAN 1 FT. COVER INCHES (GAUGE)
18	1.8	101	142			0.064 (16)
21	2.4	86	121	203		0.064 (16)
24	3.1	75	106	177		0.064 (16)
27	4.0	67	94	157		0.064 (16)
30	4.9	60	84	141		0.064 (16)
36	7.1	49	70	117		0.064 (16)
42	9.6	42	59	100		0.064 (16)
48	12.6	36	51	87	127	0.064 (16)
54	16.0		45	77	113	0.079 (14)
60	19.6		40	69	101	0.079 (14)
66	23.8			62	92	0.109 (12)
72	28.3			57	84	0.109 (12)
78	33.2			52	77	0.109 (12)
84	38.6				71	0.138 (10)
90	44.17				66	0.138 (10)

NOTES:

1. COVER HEIGHTS INDICATED IN TABLE ARE FOR FINISHED CONSTRUCTION, USING AASHTO LRFD BRIDGE DESIGN SPECIFICATIONS AND ASSUMING 25% METAL LOSS AT END OF DESIGN LIFE.
2. TO PROTECT PIPE DURING CONSTRUCTION, MINIMUM HEIGHT OF COVER TO BE IN ACCORDANCE WITH TABLE A PRIOR TO ALLOWING CONSTRUCTION TRAFFIC TO CROSS INSTALLATION. THE COVER SHALL EXTEND THE FULL LENGTH OF THE PIPE. THE APPROACH FILL IS TO EXTEND A MINIMUM OF 15 DIAMETERS ON EACH SIDE OF THE PIPE OR TO THE INTERSECTION WITH THE CUT.
3. MINIMUM FINISHED HEIGHT OF COVER FOR ALL PIPES, EXCEPT THOSE UNDER ENTRANCES, SHALL BE 2.0' OR 1/2 DIAMETER, WHICHEVER IS GREATER. IN CASES IN WHICH THESE COVER HEIGHTS CANNOT BE ACHIEVED, AN ABSOLUTE MINIMUM FINISHED COVER HEIGHT OF 1.0' OR 1/2 DIAMETER, WHICHEVER IS GREATER, WILL BE ALLOWED ONLY IF ALL POSSIBLE MEANS TO OBTAIN THE STANDARD VALUE HAVE BEEN EXHAUSTED. THE MINIMUM FINISHED HEIGHT OF COVER FOR PIPES UNDER ENTRANCES IS 9" FOR PIPE DIAMETERS LESS THAN OR EQUAL TO 24" AND 12" OR 1/4 DIAMETER, WHICHEVER IS GREATER, FOR PIPE DIAMETERS GREATER THAN 24". WHERE POLYMER COATED PIPE WILL BE USED AND THE SURFACE OVER THE TOP OF THE PIPE WILL BE ASPHALT, CLASS I BACKFILL MATERIAL IS TO BE PLACED UP TO A MINIMUM OF 6" ABOVE THE TOP OF THE PIPE.
4. SEE STANDARD PB-1 FOR PIPE BEDDING AND BACKFILL REQUIREMENTS.
5. A MAXIMUM HEIGHT OF COVER TABLE FOR STEEL SPIRAL RIB WITH 3/4" WIDE x 1" DEEP RIPS SPACED AT 11 1/2" IS AVAILIBLE UPON REQUEST.

TABLE A

PIPE DIAMETER	MINIMUM COVER HEIGHT (SEE NOTE 2)
12" TO 30"	18"
36" AND ABOVE	1/2 DIAMETER

VDOT ROAD AND BRIDGE STANDARDS — SHEET 13 OF 18 — 107.17 — REVISION DATE 11/15

A COPY OF THE ORIGINAL SEALED AND SIGNED STANDARD DRAWING IS ON FILE IN THE CENTRAL OFFICE

STEEL SPIRAL RIB PIPE
HEIGHT OF COVER TABLE FOR HL-93 LIVE LOAD
VIRGINIA DEPARTMENT OF TRANSPORTATION

SPECIFICATION REFERENCE 232 302

PC-1

CAST IRON PIPE CULVERT DESIGNATION

DIAMETER INCHES	AREA SQ. FT.	MAXIMUM HEIGHT OF COVER IN FEET 1-13	14-21	22-35 (2)
12 (2)	0.8	STANDARD PIPE	HEAVY PIPE	EXTRA HEAVY PIPE
15 (3)	1.2			
16 (2) (4)	1.4			
18 (1)	1.8			
24 (1)	3.1			
30 (1)	4.9			
36 (1)	7.1			
42 (2)	9.6			
48 (2)	12.6			

(1) PIPE MAY BE SMOOTH CAST IRON, CORRUGATED CAST IRON, OR RIBBED CAST IRON.
(2) PIPE TO BE SMOOTH CAST IRON ONLY.
(3) PIPE TO BE CORRUGATED CAST IRON OR RIBBED CAST IRON.
(4) MAY BE SUBSTITUTED FOR 15" PIPE CULVERT AT NO INCREASE IN PRICE BID FOR 15" PIPE, WHERE APPROVED BY THE ENGINEER.

NOTES:

1. COVER HEIGHTS INDICATED IN TABLES ARE FOR FINISHED CONSTRUCTION WHICH MATCH FORMER VDOT ALLOWABLE STRESS DESIGN TABLES. COVER HEIGHTS WERE NOT RE-CALCULATED USING LRFD
2. TO PROTECT PIPE DURING CONSTRUCTION, MINIMUM HEIGHT OF COVER PRIOR TO ALLOWING CONSTRUCTION TRAFFIC TO CROSS INSTALLATION IS TO BE 24". THIS COVER IS TO EXTEND THE FULL LENGTH OF THE PIPE CULVERT. THE APPROACH FILL RAMP IS TO EXTEND A MINIMUM OF 10 (DIAMETER + 36") ON EACH SIDE OF THE CULVERT, OR TO THE INTERSECTION WITH A CUT.
3. MINIMUM FINISHED HEIGHT OF COVER TO BE 24", EXCEPT PIPE UNDER ENTRANCES AND MEDIAN CROSSOVERS WHERE A 9" MINIMUM WILL BE PERMITTED.
4. SEE STANDARD PB-1 FOR PIPE BEDDING AND BACKFILL REQUIREMENTS.

SPECIFICATION REFERENCE 232 302

A COPY OF THE ORIGINAL SEALED AND SIGNED STANDARD DRAWING IS ON FILE IN THE CENTRAL OFFICE

CAST IRON PIPE
HEIGHT OF COVER TABLE FOR HL-93 LIVE LOAD
VIRGINIA DEPARTMENT OF TRANSPORTATION

VDOT ROAD AND BRIDGE STANDARDS — SHEET 14 OF 18 — 107.18 — REVISION DATE 11/15

PC-1

POLYETHYLENE CORRUGATED PIPE (PE)
(SEE NOTE 5)

DIAMETER INCHES	AREA SQ. FT.	MAXIMUM HEIGHT OF COVER FEET
12	0.8	24
15	1.2	24
18	1.8	20
24	3.1	20
30	4.9	19
36	7.1	18
42	9.6	18
48	12.6	17
54	15.9	16
60	19.6	16

POLYVINYLCHLORIDE PROFILE WALL PIPE (PVC)

DIAMETER INCHES	AREA SQ. FT.	MAXIMUM HEIGHT OF COVER FEET
18	1.7	41
21	2.3	40
24	3.0	37
30	4.7	34
36	6.9	34

POLYPROPYLENE PIPE (PP)
(SEE NOTE 6)

DIAMETER INCHES	AREA SQ. FT.	MAXIMUM HEIGHT OF COVER FEET
12	0.8	25
15	1.2	25
18	1.8	21
24	3.1	20
30	4.9	19
36	7.1	18
42	9.6	18
48	12.6	17
60	19.6	17

NOTES:

1. COVER HEIGHTS INDICATED IN TABLES ARE FOR FINISHED CONSTRUCTION, USING AASHTO LRFD BRIDGE DESIGN SPECIFICATIONS.
2. TO PROTECT PIPE DURING CONSTRUCTION, MINIMUM HEIGHT OF COVER TO BE IN ACCORDANCE WITH TABLE A PRIOR TO ALLOWING CONSTRUCTION TRAFFIC TO CROSS INSTALLATION. THE COVER SHALL EXTEND THE FULL LENGTH OF THE PIPE. THE APPROACH FILL IS TO EXTEND A MINIMUM OF 10(DIAMETER + 1/2 DIAMETER) ON EACH SIDE OF THE PIPE OR TO THE INTERSECTION WITH A CUT.
3. STANDARD MINIMUM FINSHED HEIGHT OF COVER FOR ALL PIPES, EXCEPT THOSE UNDER ENTRANCES, SHALL BE 2.0' OR 1/2 DIAMETER WHICHEVER IS GREATER. FOR 12" THROUGH 48" DIAMETER PIPE INSTALLATIONS WHERE THE COVER HEIGHTS CANNOT BE ACHIEVED, AN ABSOLUTE MINIMUM FINSHED COVER HEIGHT OF 1.0' WILL BE ALLOWED ONLY IF ALL POSSIBLE MEANS TO OBTAIN THE STANDARD VALUE HAVE BEEN EXHAUSTED. THE MINIMUM FINSHED HEIGHT OF COVER FOR PIPES UNDER ENTRANCES IS 9" FOR PIPE DIAMETERS LESS THAN OR EQUAL TO 24", AND 12" FOR PIPE DIAMETERS GREATER THAN 24". WHERE THE SURFACE OVER THE TOP OF THE PIPE WILL BE ASPHALT, A MINIMUM OF 6" OF CLASS I BACKFILL MATERIAL IS TO BE PLACED BETWEEN THE TOP OF THE PIPE AND THE BOTTOM OF THE ASPHALT.
4. SEE STANDARD PB-1 FOR PIPE BEDDING AND BACKFILL REQUIREMENTS.
5. HEIGHT OF COVER VALUES FOR 12" THROUGH 36" DIAMETER APPLY TO TYPE C OR S. HEIGHT OF COVER VALUES FOR 42" THROUGH 60" APPLY TO TYPE S ONLY.
6. HEIGHT OF COVER VALUES FOR 12" THROUGH 30" DIAMETER APPLY TO TYPE S. HEIGHT OF COVER VALUES FOR 36" THROUGH 60" APPLY TO TYPE D.
7. LARGE CULVERTS SHALL BE DESIGNED BY AN ENGINEER, REGISTERED IN THE COMMONWEALTH OF VIRGINIA AND SHALL BE DESIGNED IN ACCORDANCE WITH THE REQUIREMENTS OF VOLUME V, PART 2 OF THE MANUAL OF THE STRUCTURE AND BRIDGE DIVISION. A LARGE CULVERT IS ANY CULVERT THAT WILL BECOME PART OF THE STRUCTURE AND BRIDGE INVENTORY. THE GEOMETRIC DEFINITION OF THESE STRUCTURES IS PROVIDED IN THE CURRENT VERSION OF VDOT'S IM-S&B-27.

TABLE A

PIPE DIAMETER	MINIMUM COVER HEIGHT DURING CONSTRUCTION (SEE NOTE 2)
12" TO 30"	18"
36" AND ABOVE	1/2 DIAMETER

VDOT ROAD AND BRIDGE STANDARDS — SHEET 15 OF 18 — 107.19 — REVISION DATE 11/15

A COPY OF THE ORIGINAL SEALED AND SIGNED STANDARD DRAWING IS ON FILE IN THE CENTRAL OFFICE

PLASTIC PIPE
HEIGHT OF COVER TABLES FOR HL-93 LIVE LOAD
VIRGINIA DEPARTMENT OF TRANSPORTATION

SPECIFICATION REFERENCE 232 302

PC-1

TABLE A - ALLOWABLE TYPE OF PIPE CULVERT
FOR ROADWAYS THAT ARE CONSTRUCTED, FUNDED OR WILL ULTIMATELY BE MAINTAINED BY VDOT

FUNCTIONAL CLASSIFICATION OF ROADS SYSTEM UNDER WHICH PIPE IS TO BE INSTALLED

ALLOWABLE PIPE CULVERTS NOTES 1 & 2	HIGHER FUNCTIONAL CLASS. - HFC. 75 - YEAR DESIGN LIFE. RURAL PRINCIPAL ARTERIAL, URBAN PRINCIPAL ARTERIAL, RURAL MINOR ARTERIAL, URBAN MINOR ARTERIAL, RURAL COLLECTOR ROADS, URBAN COLLECTOR STREETS, SUBDIVISION STREETS WITH AN ADT GREATER THAN 4000: STATEWIDE EXCEPT LOCATIONS SHOWN IN TABLE B	LOCATION SHOWN IN TABLE B	LOWER FUNCTIONAL CLASS. - LFC. 50 - YEAR DESIGN LIFE. RURAL LOCAL ROADS, URBAN LOCAL STREETS, SUBDIVISION STREETS WITH AN ADT LESS THAN OR EQUAL TO 4000: STATEWIDE EXCEPT LOCATIONS SHOWN IN TABLE B	LOCATION SHOWN IN TABLE B	ENTRANCE PIPE: STATEWIDE
CONCRETE	✓	✓	✓	✓	✓
ALUMINUM COATED TYPE 2 CORRUGATED STEEL NOTE 3	✓		✓		✓
POLYMER COATED (10/10) CORRUGATED STEEL NOTE 3	✓	✓	✓	✓	✓
UNCOATED GALVANIZED CORRUGATED STEEL NOTES 3 & 4					✓
GALVANIZED STEEL STRUCTURAL PLATE NOTE 3			✓		✓
GALVANIZED STEEL STRUCTURAL PLATE WITH THICKENED INVERT NOTE 3, 5	✓		✓	✓	✓
CORRUGATED ALUMINUM ALLOY NOTE 3	✓	✓	✓	✓	✓
CORRUGATED ALUMINUM ALLOY STRUCTURAL PLATE NOTE 3	✓	✓	✓	✓	✓
POLYVINYLCHLORIDE (PVC) PROFILE WALL PIPE (SMOOTH INTERIOR)	✓	✓	✓	✓	✓
POLYETHYLENE (PE) CORRUGATED TYPE C	✓	✓	✓	✓	✓
POLYETHYLENE (PE) CORRUGATED TYPE S	✓	✓	✓	✓	✓
POLYPROPYLENE (PP) TYPE D OR S	✓	✓	✓	✓	✓

NOTES:

1. ALLOWABLE TYPES OF PIPES FOR A SPECIFIC AREA ARE TO CONFORM TO THE CRITERIA SHOWN IN TABLES A, A1, B, AND C. ANY DEVIATION MUST BE APPROVED BY THE STATE LOCATION AND DESIGN ENGINEER AND THE DISTRICT MATERIALS ENGINEER.
2. SEE HEIGHT OF COVER TABLES FOR MINIMUM AND MAXIMUM COVER LIMITATIONS FOR EACH TYPE OF PIPE.
3. SEE TABLE C FOR MINIMUM AND MAXIMUM pH, RESISTIVITY, AND VELOCITY LIMITATIONS FOR METAL PIPES. SEE TABLE D FOR REQUIRED GAUGE OF METAL PIPE.
4. USE ONLY UNDER ENTRANCES WHERE THE PIPE SIZE IS LESS THAN OR EQUAL TO 30" DIAMETER (OR EQUIVALENT) AND THE HEIGHT OF COVER IS LESS THAN OR EQUAL TO 15' AND AS AN OUTLET PIPE FOR STANDARD DI-13 SHOULDER SLOT INLETS.
5. BOTTOM AND CORNER PLATES SHALL BE 2 GAUGE STEPS THICKER

SPECIFICATION REFERENCE 232 302

A COPY OF THE ORIGINAL SEALED AND SIGNED STANDARD DRAWING IS ON FILE IN THE CENTRAL OFFICE

ALLOWABLE PIPE CRITERIA FOR
CULVERT AND STORM SEWERS
VIRGINIA DEPARTMENT OF TRANSPORTATION

VDOT ROAD AND BRIDGE STANDARDS — SHEET 16 OF 18 — 107.20 — REVISION DATE 11/15

PC-1

TABLE A1 - ALLOWABLE TYPE OF STORM SEWER PIPE
FOR ROADWAYS THAT ARE CONSTRUCTED, FUNDED OR WILL ULTIMATELY BE MAINTAINED BY VDOT

FUNCTIONAL CLASSIFICATION OF ROADS SYSTEM UNDER WHICH PIPE IS TO BE INSTALLED

ALLOWABLE PIPE CULVERTS NOTES 1 & 2	HIGHER FUNCTIONAL CLASS. - HFC. 75 - YEAR DESIGN LIFE. RURAL PRINCIPAL ARTERIAL, URBAN PRINCIPAL ARTERIAL, RURAL MINOR ARTERIAL, URBAN MINOR ARTERIAL, RURAL COLLECTOR ROADS, URBAN COLLECTOR STREETS, SUBDIVISION STREETS WITH AN ADT GREATER THAN 4000: STATEWIDE	LOWER FUNCTIONAL CLASS. - LFC. 50 - YEAR DESIGN LIFE. RURAL LOCAL ROADS, URBAN LOCAL STREETS, SUBDIVISION STREETS WITH AN ADT LESS THAN OR EQUAL TO 4000: STATEWIDE EXCEPT LOCATIONS SHOWN IN TABLE B	LOCATION SHOWN IN TABLE B
CONCRETE	✓	✓	✓
ALUMINUM COATED TYPE 2 STEEL SPIRAL RIB NOTE 3		✓	
POLYMER COATED (10/10) CORRUGATED STEEL SPIRAL RIB NOTE 3		✓	✓
POLYMER COATED (10/10) CORRUGATED STEEL DOUBLE WALL (SMOOTH INTERIOR) NOTE 3	✓	✓	✓
ALUMINUM SPIRAL RIB NOTE 3		✓	✓
POLYVINYLCHLORIDE (PVC) PROFILE WALL PIPE (SMOOTH INTERIOR)	✓	✓	✓
POLYETHYLENE (PE) CORRUGATED TYPE S	✓	✓	✓
POLYPROPYLENE (PP) TYPE D OR S	✓	✓	✓

TABLE B
EXCEPTIONS TO STATEWIDE APPLICATIONS

COUNTIES (INCLUDING TOWNS)			CITIES	
ARLINGTON - EAST OF AND INCLUDING RTES. 95 & 395		SURRY - EAST OF AND INCLUDING RTE. 10	SUFFOLK - EAST OF AND INCLUDING RTE. 32	
FAIRFAX - EAST OF AND INCLUDING RTES. 95 & 395		ISLE OF WIGHT - EAST OF AND INCLUDING RTE. 10	CHESAPEAKE	WILLIAMSBURG
PRINCE WILLIAM - EAST OF AND INCLUDING RTES. 95 & 395			VIRGINIA BEACH	POQUOSON
WESTMORELAND	JAMES CITY	ES/SEX	NORTHAMPTON	HAMPTON	PORTSMOUTH
LANCASTER	ACCOMACK	MIDDLESEX	STAFFORD	NEWPORT NEWS	
MATTHEWS	SPOTSYLVANIA	YORK	KING GEORGE	NORFOLK	
GLOUCESTER	NORTHUMBERLAND	RICHMOND		ALEXANDRIA	
				FREDERICKSBURG	

TABLE C

PIPE TYPE	ALLOWABLE pH RANGE (SEE NOTE 6) MIN.	MAX.	ALLOWABLE RESISTIVITY RANGE (Ohms-cm) MIN.	MAX.	ALLOWABLE VELOCITY RANGE (SEE NOTE 4) MAXIMUM
UNCOATED GALVANIZED CORRUGATED STEEL	6.0	10.0	2000	10000	5
GALVANIZED STEEL STRUCTURAL PLATE	6.0	9.0	2000	10000	5
GALVANIZED STEEL STRUCTURAL PLATE WITH THICKENED INVERT	6.0	9.0	2000	10000	15
ALUMINUM COATED TYPE 2 CORRUGATED STEEL	5.0	9.0	1500	-	5
ALUMINUM COATED TYPE 2 SPIRAL RIB	5.0	9.0	1500	-	5
CORRUGATED ALUMINUM ALLOY	4.0	9.0	1500	-	5
CORRUGATED ALUMINUM ALLOY STRUCTURAL PLATE	4.0	9.0	1500	-	5
ALUMINUM SPIRAL RIB	4.0	9.0	1500	-	5
POLYMER COATED (10/10) CORRUGATED STEEL	4.0	9.0	750	-	10
POLYMER COATED CORRUGATED STEEL SPIRAL RIB	4.0	9.0	750	-	10
POLYMER COATED CORRUGATED STEEL DOUBLE WALL	4.0	9.0	750	-	10

NOTES:

1. ALLOWABLE TYPES OF PIPES FOR A SPECIFIC AREA ARE TO CONFORM TO THE CRITERIA SHOWN IN TABLES A, A1 B, AND C. ANY DEVIATION MUST BE APPROVED BY THE STATE LOCATION AND DESIGN ENGINEER AND THE DISTRICT MATERIALS ENGINEER.
2. SEE HEIGHT OF COVER TABLES FOR MINIMUM AND MAXIMUM COVER LIMITATIONS FOR EACH TYPE OF PIPE.
3. SEE TABLE C FOR MINIMUM AND MAXIMUM pH, RESISTIVITY, AND VELOCITY LIMITATIONS FOR METAL PIPES. SEE TABLE D FOR REQUIRED GAUGE OF METAL PIPE.
4. ALLOWABLE WATER VELOCITY IN PIPE WHERE ABRASIVE BEDLOAD IS PRESENT OR ANTICIPATED. MAXIMUM VELOCITY BASED ON 10 YEAR DESIGN DISCHARGE (Q).
5. pH VALUES APPLY TO BOTH THE IN-SITU SOIL AND WATER. THE LESSER OF THE TWO VALUES SHALL APPLY.
6. pH OF SOIL - AASHTO T289. pH OF WATER - ASTM 1293-12 METHOD A RESISTIVITY (MINIMUM) OF SOIL - AASHTO T288
7. LARGE CULVERTS SHALL BE DESIGNED BY AN ENGINEER, REGISTERED IN THE COMMONWEALTH OF VIRGINIA AND SHALL BE DESIGNED IN ACCORDANCE WITH THE REQUIREMENTS OF VOLUME V, PART 2 OF THE MANUAL OF THE STRUCTURE AND BRIDGE DIVISION. A LARGE CULVERT IS ANY CULVERT THAT WILL BECOME PART OF THE STRUCTURE AND BRIDGE INVENTORY. THE GEOMETRIC DEFINITION OF THESE STRUCTURES IS PROVIDED IN THE CURRENT VERSION OF VDOT'S IM-S&B-27.

VDOT ROAD AND BRIDGE STANDARDS — SHEET 17 OF 18 — 107.21 — REVISION DATE 11/15

A COPY OF THE ORIGINAL SEALED AND SIGNED STANDARD DRAWING IS ON FILE IN THE CENTRAL OFFICE

ALLOWABLE PIPE CRITERIA FOR
CULVERT AND STORM SEWERS
VIRGINIA DEPARTMENT OF TRANSPORTATION

SPECIFICATION REFERENCE 232 302

PC-1

TABLE D - REQUIRED METAL GAUGE THICKNESS (AFTER ABRASION CONSIDERATIONS)

TABLE D FOR GALVANIZED STEEL 50-YEAR DESIGN LIFE — MINIMUM IN -SITU SOIL RESISTIVITY

pH *	2000	3000	4000	5000	6000	7000	8000	>9000
6	10	12	12	12	12	12	14	14
6.5	12	12	12	14	14	14	14	16
6.8	12	14	14	14	16	16	16	16
7	14	14	16	16	16	16	16	16
7.1	14	16	16	16	16	16	16	16
≥ 7.2	16	16	16	16	16	16	16	16

TABLE D FOR GALVANIZED STEEL 75-YEAR DESIGN LIFE — MINIMUM IN -SITU SOIL RESISTIVITY

pH *	2000	3000	4000-5000	6000-8000	>9000
6	8	8	10	10	12
6.5	8	10	10	12	12
6.8	10	10	12	12	12
7	10	12	12	12	12
7.1	12	12	12	12	12
≥7.2	12	12	12	12	12

TABLE D FOR ALUMINUM COATED TYPE 2, ALUMINUM ALLOY, AND POLYMER -COATED STEEL 50-YEAR DESIGN LIFE — MINIMUM IN -SITU SOIL RESISTIVITY

pH *	1500	2000	3000	4000	5000	6000	7000	8000	9000	10000	>20000
4	12	14	14	14	14	14	14	14	14	14	16
5	14	14	14	14	14	14	14	14	14	14	16
5.5	14	14	14	14	14	14	16	16	16	16	16
6	14	14	14	14	14	16	16	16	16	16	16
6.5	14	14	14	16	16	16	16	16	16	16	16
6.8	14	14	16	16	16	16	16	16	16	16	16
≥7	16	16	16	16	16	16	16	16	16	16	16

TABLE D FOR ALUMINUM COATED TYPE 2, ALUMINUM ALLOY, AND POLYMER -COATED STEEL 75-YEAR DESIGN LIFE — MINIMUM IN -SITU SOIL RESISTIVITY

pH *	1500	2000	3000	4000	5000	6000	7000	8000	9000	10000	20000	30000	40000	50000	>50000
4	N/A	8	12	12	14	14	14	14	14	14	14	14	14	14	14
5	10	12	14	14	14	14	14	14	14	14	14	14	14	14	14
5.5	12	12	14	14	14	14	14	14	14	14	14	14	14	14	16
6	12	14	14	14	14	14	14	14	14	14	14	14	14	16	16
6.5	14	14	14	14	14	14	14	14	14	14	14	14	16	16	16
6.8	14	14	14	14	14	14	14	14	14	14	16	16	16	16	16
7	14	14	14	14	14	14	14	14	14	16	16	16	16	16	16
7.1	14	14	14	14	14	14	14	14	16	16	16	16	16	16	16
7.2	14	14	14	14	14	16	16	16	16	16	16	16	16	16	16
7.3	14	14	16	16	16	16	16	16	16	16	16	16	16	16	16
> 7.3	14	16	16	16	16	16	16	16	16	16	16	16	16	16	16

NOTES:

1. LEVEL 3 ABRASION IS MAXIMUM FOR POLYMER COATED STEEL PIPE AND GALVANIZED STEEL PLATE WITH THICKENED INVERT.
2. LEVEL 2 ABRASION IS MAXIMUM FOR REST OF METAL PIPES.
3. PIPES THAT MEET THE CRITERIA OF TABLES A, B, AND C, MAY NOT MEET THE CONSIDERATION OF PARTICLE SIZE OF THE BEDLOAD AS DESCRIBED IN THE FHWA ABRASION REQUIREMENTS.
4. BASED ON pH AND RESISTIVITY REQUIREMENTS THE GAUGE OF PIPE MAY NEED TO BE INCREASED AS NOTED IN THESE TABLES TO ATTAIN THE REQUIRED DESIGN LIFE.

* MINIMUM AND MAXIMUM ph FOR EACH PIPE TYPE IS LISTED IN TABLE C

ABRASION LEVEL DEFINITIONS (FHWA)

LEVEL 1 - NONABRASIVE CONDITIONS, AREAS OF NO BEDLOAD AND VERY LOW VELOCITIES. THIS IS THE CONDITION ASSUMED FROM THE SOIL SIDE OF DRAINAGE PIPES.

LEVEL 2 - LOW ABRASIVE CONDITIONS, AREAS OF MINOR BEDLOADS AND VELOCITIES OF 5 ft/s OR LESS.

LEVEL 3 - MODERATE ABRASIVE CONDITIONS, AREAS OF MODERATE BEDLOADS OF SAND AND GRAVEL AND VELOCITIES BETWEEN 5 ft/s AND 15 ft/s.

LEVEL 4 - SEVERE ABRASIVE CONDITIONS, AREAS OF HEAVY BEDLOADS OF SAND, GRAVEL, AND ROCK AND VELOCITIES EXCEEDING 15 ft/s.

SPECIFICATION REFERENCE 232 302

A COPY OF THE ORIGINAL SEALED AND SIGNED STANDARD DRAWING IS ON FILE IN THE CENTRAL OFFICE

ALLOWABLE PIPE CRITERIA FOR
CULVERT AND STORM SEWERS
VIRGINIA DEPARTMENT OF TRANSPORTATION

VDOT ROAD AND BRIDGE STANDARDS — SHEET 18 OF 18 — 107.22 — REVISION DATE 11/15

PROJECT	SHEET NO.
0029-151-105	2P(4)

Rinker Design Associates, P.C. — Civil Engineering · Surveying · Land Planning · Transportation · Environmental · Right of Way Services
Office Locations: 4121 Legato Road, Suite 100, Fairfax, VA 22033, Phone: (703) 368-7373 Fax: (703) 368-7374 | 4121 Carrington Boulevard, Suite 100, Olde Mill, VA 23502, Phone: (757) 466-0000 Fax: (757) 466-0000 | 5104 Harvest Boulevard, Suite 100, Manassas, VA 20109, Phone: (703) 368-7373 Fax: (703) 257-0444 | 1015 Bridge Street, Suite 100, Fredericksburg, VA 22401, Phone: (540) 373-4373 Fax: (540) 373-4374
4/20/2016

Rinker Design Associates, P.C.
Civil Engineering - Surveying - Land Planning
Transportation - Environmental
Right of Way Services
Office Locations
Main Office: 4101 Cox Road, Glen Allen, VA 23060 Phone: (804) 262-8001 Fax: (804) 262-8009
Norfolk Office: 4525 Corporation Boulevard, Suite 200, Virginia Beach, VA 23462 Phone: (757) 490-9220 Fax: (757) 490-9221
Newport News Office: 12330 Jefferson Avenue, Suite 200, Newport News, VA 23602 Phone: (757) 596-5050 Fax: (757) 596-5054
Petersburg Office: 1011 Wythe Street, Petersburg, VA 23803 Phone: (804) 861-1460 Fax: (804) 861-1464
www.rinkerdesign.com

PROJECT MANAGER Wendy Black Sanford, City of Fairfax (703) 385-7889
SURVEYED BY Rinker Design Assoc. P.C. (703) 368-7373 (2011)
DESIGNED BY Adam D. Weischenbach P.E., Rinker Design Assoc. P.C. (703) 368-7373
SUBSURFACE UTILITY PROVIDED BY Accumark (2011)

VDOT Insertable Sheets

REVISED	STATE	ROUTE	PROJECT	SHEET NO.
	VA.	-	0029-151-105 P101, P102, R201, C501	2P(5)

DESIGN FEATURES RELATING TO CONSTRUCTION OR TO REGULATION AND CONTROL OF TRAFFIC MAY BE SUBJECT TO CHANGE AS DEEMED NECESSARY BY THE DEPARTMENT

CG-12

GENERAL NOTES:

1. THE DETECTABLE WARNING SHALL BE PROVIDED BY TRUNCATED DOMES.
2. DETECTABLE WARNING SHALL BE FROM THE MATERIALS APPROVED LIST FOR DETECTABLE WARNING SURFACES. PRODUCTS NOT LISTED SHALL MEET THE REQUIREMENTS OF THE SPECIAL PROVISION FOR CG-12 DETECTABLE WARNING SURFACE AND SHALL BE SUBMITTED TO THE STANDARDS AND SPECIAL DESIGN SECTION FOR APPROVAL.
3. SLOPING SIDES OF CURB RAMP MAY BE POURED MONOLITHICALLY WITH RAMP FLOOR OR BY USING PERMISSIBLE CONSTRUCTION JOINT WITH REQUIRED BARS.
4. IF RAMP FLOOR IS PRECAST, HOLES MUST BE PROVIDED FOR DOWEL BARS SO THAT ADJOINING FLARED SIDES CAN BE CAST IN PLACE AFTER PLACEMENT OF PRECAST RAMP FLOOR. PRECAST CONCRETE SHALL BE CLASS A-4.
5. REQUIRED BARS ARE TO BE #5, NO. 5 X 8' PLACED 1' CENTER TO CENTER ALONG BOTH SIDES OF THE RAMP FLOOR, MID-DEPTH OF RAMP FLOOR. MINIMUM CONCRETE COVER 1½".
6. CURB / CURB AND GUTTER SLOPE TRANSITIONS ADJACENT TO CURB RAMPS ARE INCLUDED IN PAYMENT FOR CURB / CURB AND GUTTER.
7. CURB RAMPS ARE TO BE LOCATED AS SHOWN ON THE PLANS OR AS DIRECTED BY THE ENGINEER. THEY ARE TO BE PROVIDED AT INTERSECTIONS WHEREVER AN ACCESSIBLE ROUTE WITHIN THE RIGHT OF WAY OF A HIGHWAY FACILITY CROSSES A CURB REGARDLESS OF WHETHER SIDEWALK IS EXISTING, PROPOSED, OR NONEXISTENT. THEY MUST BE LOCATED WITHIN PEDESTRIAN CROSSWALKS AS SHOWN ON PLANS OR AS DIRECTED BY THE ENGINEER, AND SHOULD NOT BE LOCATED BEHIND VEHICLE STOP LINES, EXISTING LIGHT POLES, FIRE HYDRANTS, DROP INLETS, ETC. ACCESSIBLE ROUTES PROVIDE A CONTINUOUS UNOBSTRUCTED, STABLE, FIRM AND SLIP RESISTANT PATH CONNECTING ALL ACCESSIBLE ELEMENTS OF A FACILITY THAT CAN BE APPROACHED, ENTERED AND USED BY PEDESTRIANS.
8. RAMPS MAY BE PLACED ON RADIAL OR TANGENTIAL SECTIONS PROVIDED THAT THE CURB OPENING IS PLACED WITHIN THE LIMITS OF THE CROSSWALK AND THAT THE SLOPE AT THE CONNECTION OF THE CURB OPENING IS PERPENDICULAR TO THE CURB.
9. TYPICAL CONCRETE SIDEWALK IS 4" THICK. WHEN THE ENTRANCE RADII CANNOT ACCOMMODATE THE TURNING REQUIREMENTS OF ANTICIPATED HEAVY TRUCK TRAFFIC, REFER TO STANDARD CG-13, COMMERCIAL ENTRANCE (HEAVY TRUCK TRAFFIC) FOR CONCRETE DEPTH.
10. WHEN CURB RAMPS ARE USED IN CONJUNCTION WITH A SHARED USE PATH, THE MINIMUM WIDTH SHALL BE THE WIDTH OF THE SHARED USE PATH.
11. WHEN ONLY ONE CURB RAMP IS PROVIDED FOR TWO CROSSINGS (DIAGONAL), A 4' x 4' LANDING AREA SHALL BE PROVIDED TO MANEUVER A WHEELCHAIR INTO THE CROSSWALK WITHOUT GOING INTO THE TRAVELWAY. THIS 4' x 4' LANDING AREA MAY INCLUDE THE GUTTER PAN.
12. ALL CASES WHERE CURB RAMPS INTERSECT A RADIAL SECTION OF CURB AT ENTRANCES OR STREET CONNECTIONS, THE DETECTABLE WARNING SURFACE SHALL HAVE A FACTORY RADIUS OR BE FIELD -MODIFIED AS RECOMMENDED BY THE MANUFACTURER TO MATCH THE BACK OF CURB.

NOTE: COMPONENTS OF CURB RAMPS CONSIST OF THE FOLLOWING: HYDRAULIC CEMENT SIDEWALK (DEPTH IN INCHES, AREA IN SQUARE YARDS) CURB WHEN REQUIRED (CG-2 OR CG-3 IN LINEAR FEET) DETECTABLE WARNING SURFACE (AREA IN SQUARE YARDS) EACH OF THE ABOVE ITEMS IS A SEPARATE PAY ITEM AND SHOULD BE SUMMARIZED FOR EACH CURB CUT RAMP.

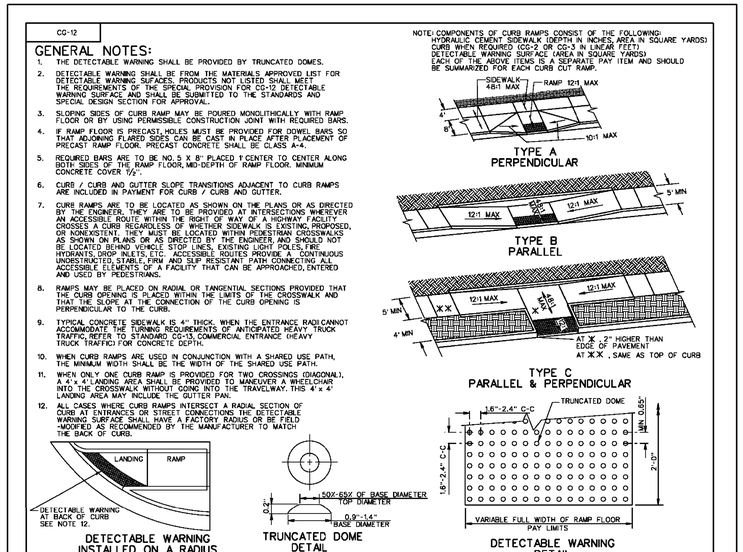

VDOT ROAD AND BRIDGE STANDARDS		CG-12 DETECTABLE WARNING SURFACE (GENERAL NOTES) VIRGINIA DEPARTMENT OF TRANSPORTATION	SPECIFICATION REFERENCE
SHEET 1 OF 5	REVISION DATE 07/15		105 502
203.03			

CG-12

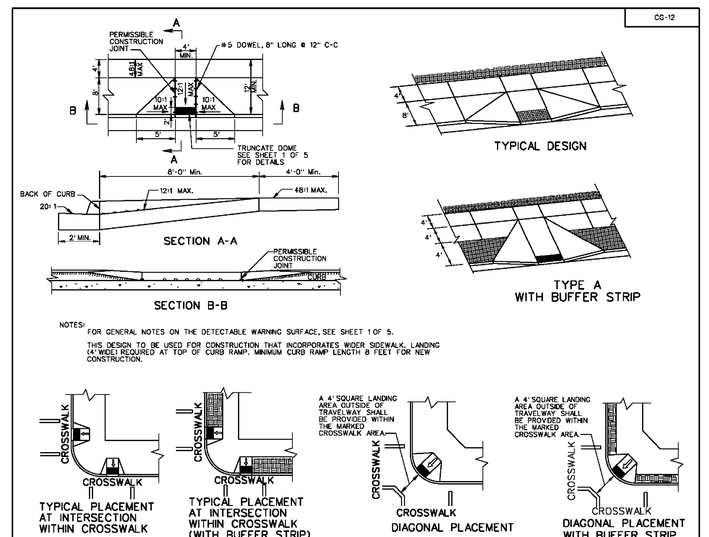

NOTES: FOR GENERAL NOTES ON THE DETECTABLE WARNING SURFACE, SEE SHEET 1 OF 5.

THIS DESIGN TO BE USED FOR CONSTRUCTION THAT INCORPORATES WIDER SIDEWALK, LANDING (4' WIDE) REQUIRED AT TOP OF CURB RAMP. MINIMUM CURB RAMP LENGTH 8 FEET FOR NEW CONSTRUCTION.

SPECIFICATION REFERENCE	CG-12 DETECTABLE WARNING SURFACE TYPE A (PERPENDICULAR) APPLICATION VIRGINIA DEPARTMENT OF TRANSPORTATION	VDOT ROAD AND BRIDGE STANDARDS	
105 502		REVISION DATE 07/15	SHEET 2 OF 5
		203.06	

CG-12

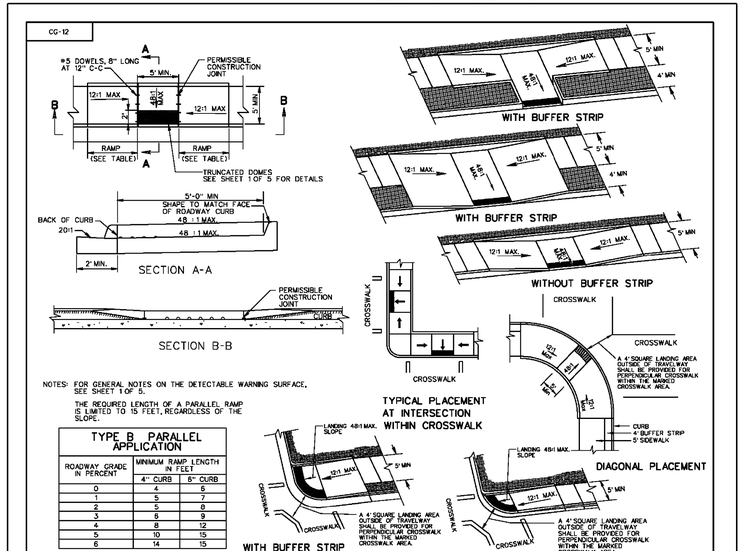

NOTES: FOR GENERAL NOTES ON THE DETECTABLE WARNING SURFACE, SEE SHEET 1 OF 5.

THE REQUIRED LENGTH OF A PARALLEL RAMP IS LIMITED TO 15 FEET, REGARDLESS OF THE SLOPE.

TYPE B PARALLEL APPLICATION

ROADWAY GRADE IN PERCENT	MINIMUM RAMP LENGTH IN FEET 4" CURB	6" CURB
0	4	6
1	5	7
2	5	8
3	6	9
4	8	12
5	10	15
6	14	15

VDOT ROAD AND BRIDGE STANDARDS		CG-12 DETECTABLE WARNING SURFACE TYPE B (PARALLEL) APPLICATION VIRGINIA DEPARTMENT OF TRANSPORTATION	SPECIFICATION REFERENCE
SHEET 3 OF 5	REVISION DATE 07/15		105 502
203.07			

CG-12

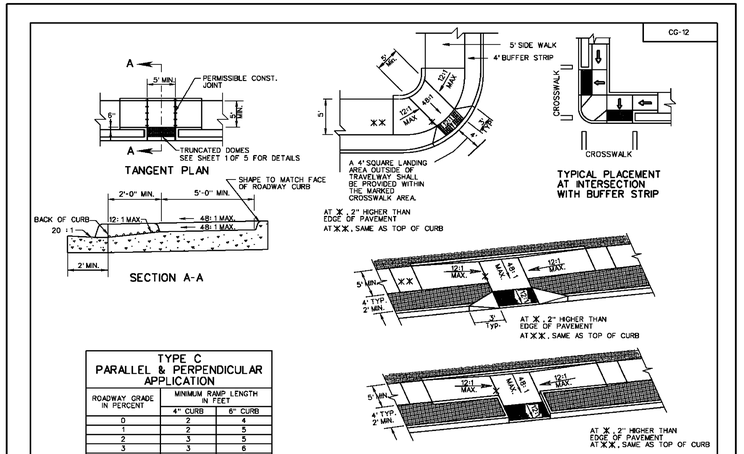

TYPE C PARALLEL & PERPENDICULAR APPLICATION

ROADWAY GRADE IN PERCENT	MINIMUM RAMP LENGTH IN FEET 4" CURB	6" CURB
0	2	4
1	2	5
2	3	5
3	3	6
4	4	8
5	5	10
6	7	14
7	13	15
8	15	15

THE REQUIRED LENGTH OF A PARALLEL RAMP IS LIMITED TO 15 FEET, REGARDLESS OF THE SLOPE.

NOTES: FOR GENERAL NOTES ON THE DETECTABLE WARNING SURFACE, SEE SHEET 1 OF 5.

THE SELECTION OF CURB TYPE AND THE CONFIGURATION OF THE BUFFER STRIP MAY VARY TO MEET EXISTING FIELD CONDITIONS AND ROADWAY GEOMETRICS PROVIDING THE DIMENSIONS AND SLOPES ARE AS NOTED.

THIS COMBINED (PARALLEL & PERPENDICULAR) DESIGN CAN BE USED WITH ADJOINING BUFFER STRIP. LANDING AT BOTTOM OF TWO SLOPING SIDES WITH 5' X 5' MIN. DIMENSIONS. THE SHORT PERPENDICULAR RUN TO THE STREET CAN BE PROTECTED BY A LANDSCAPED SETBACK OR CONNECTED TO THE SIDEWALK WITH A WARPED SURFACE.

SPECIFICATION REFERENCE	CG-12 DETECTABLE WARNING SURFACE TYPE C (PARALLEL & PERPENDICULAR) APPLICATION VIRGINIA DEPARTMENT OF TRANSPORTATION	VDOT ROAD AND BRIDGE STANDARDS	
105 502		REVISION DATE 07/15	SHEET 4 OF 5
		203.08	

CG-12

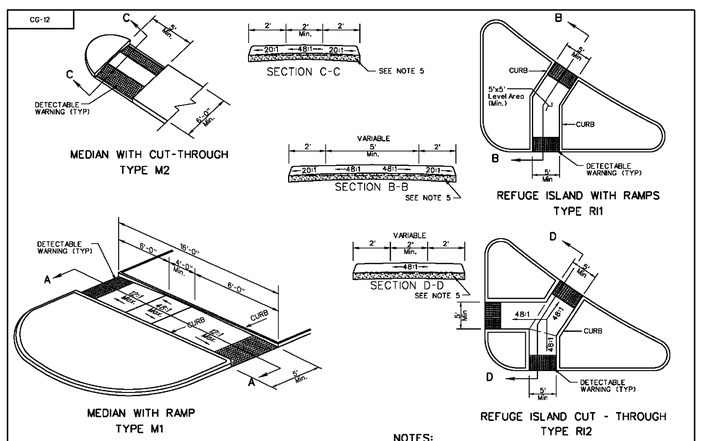

NOTES:

1. FOR GENERAL NOTES ON THE DETECTABLE WARNING SURFACE, SEE SHEET 1 OF 5.
2. CURB SHALL BE SHAPED TO MATCH THE FACE OF ROADWAY CURB.
3. SEE ROADWAY PLANS FOR MEDIAN AND REFUGE ISLAND DIMENSIONS
4. RAMPS AND CUT THROUGHS SHALL BE ALIGNED WITH CROSSWALKS.
5. THE RAMPS AND CUT THROUGHS SHALL BE INSTALLED AND PAID FOR AS 4" HYDRAULIC CEMENT CONCRETE SIDEWALK IN ACCORDANCE WITH SECTION 504 OF THE ROAD & BRIDGE SPECIFICATIONS. EXCAVATION OF MATERIAL FOR THE INSTALLATION OF THE SIDEWALK SHALL BE INCLUDED IN THE PRICE BID FOR 4" HYDRAULIC CEMENT CONCRETE SIDEWALK.
6. CUT THROUGHS LESS THAN 6' IN WIDTH SHALL NOT HAVE DETECTABLE WARNINGS INSTALLED.

VDOT ROAD AND BRIDGE STANDARDS		CG-12 DETECTABLE WARNING SURFACE MEDIAN AND REFUGE ISLAND APPLICATIONS VIRGINIA DEPARTMENT OF TRANSPORTATION	SPECIFICATION REFERENCE
SHEET 5 OF 5	REVISION DATE 7/12		105 502
203.08A			

ACOT-1

NOTES

1. TIE-IN REQUIREMENTS TO INTERSECTING ROADS OR STREETS SHALL BE IN ACCORDANCE WITH THE CONTRACT DOCUMENTS OR AT THE DIRECTION OF THE ENGINEER.
2. EXISTING PAVEMENT SURFACE SHALL BE PLANED TO TRANSITION THE TOP COURSE OF THE ASPHALT CONCRETE OVERLAY. ANY SUB-COURSE TERMINATION MAY BE NOTCHED INTO THE EXISTING PAVEMENT OR BLENDED WITH THE NEXT COURSE OF PAVEMENT.
3. WHEN THERE IS A SPECIAL PROVISION FOR RIDEABILITY INCLUDED IN THE CONTRACT, A DISTANCE OF 105 FEET (0.02 OF A MILE), MEASURED FROM THE LINE OF THE TIE-IN WILL BE EXEMPTED FROM PAY ADJUSTMENT.
4. TRANSITION SHALL BEGIN/END AT THE PROJECT LIMITS, AT BRIDGE APPROACH SLAB/ABUTMENT (OR AN INTERMEDIATE POINT DETERMINED BY THE ENGINEER), AND A MINIMUM OF 20 FEET FROM A VERTICAL PLANE OF THE NEAREST OUTER FACE OF THE BRIDGE OVERPASS.
5. NO OVERLAY OR MILLING SHALL BE PERMITTED ON THE BRIDGE DECK WITHOUT THE PRIOR WRITTEN APPROVAL OF THE DISTRICT BRIDGE ENGINEER.

TRANSITION RATE

RATE (FT./INCH)	POSTED SPEED MPH 25	35	45	55	65	70
	20	25	35	40	45	50

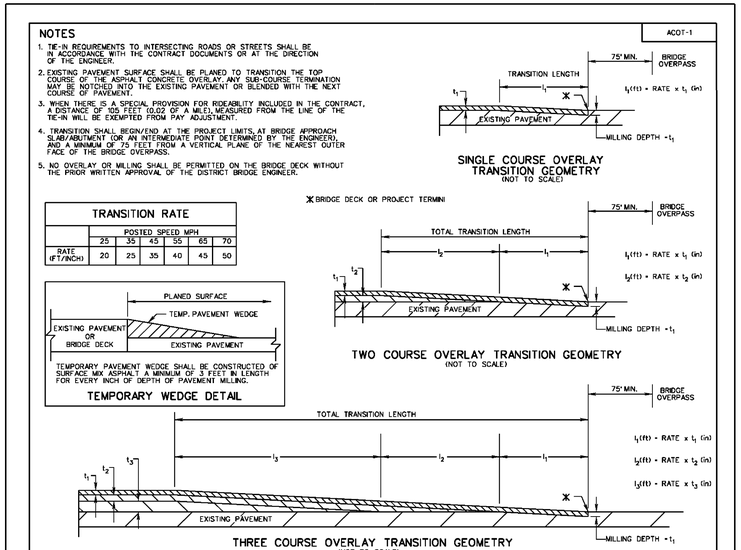

SPECIFICATION REFERENCE	A COPY OF THE ORIGINAL SEALED AND SIGNED DRAWING IS ON FILE IN THE CENTRAL OFFICE. ASPHALT CONCRETE OVERLAY TRANSITIONS VIRGINIA DEPARTMENT OF TRANSPORTATION	VDOT ROAD AND BRIDGE STANDARDS	
210 315 515		REVISION DATE 7/12	SHEET 1 OF 1
		305.01	

PROJECT	SHEET NO.
0029-151-105	2P(5)

4/20/2016